NUCLEAR RESEARCH INSTITUTE

Open Access to JRC Research Infrastructures (EMMA-AMALIA)

ÚJV Řež, a. s.

Ivana Schnablová

Team Leader of Corrosion Testing Group

Mechanical and Corrosion Testing Department

Integrity and Technical Engineering Division

UJV Group

PEOPLE I INNOVATION I TECHNOLOGY

INTRODUCTION

- **Ivana SCHNABLOVÁ**

- **ÚJV Řež, a. s., Mechanical and Corrosion Testing Department, Integrity and Technical Engineering Division(since 2012)**

- **Team Leader of Corrosion Testing Group (since 1/2022)**
- Research activities and evaluation of the experimental results of corrosion tests in autoclaves (SCC, IASCC, Environmentally Assisted Fatigue) for irradiated and non-irradiated properties quantification,
- Experience with the grant project preparation and realization (EU projects HORIZON 2020, Czech national grant projects)

- **Development and Research Specialist (08/2012 to 12/2021)**
- Research activities in accredited laboratory for irradiated material properties quantification (wide range of destructive testing techniques and analyses - fracture toughness, impact, high temperature tensile, hardness, fatigue, SEM),
- Evaluation of the experimental results of irradiated specimens within the frame of RPV surveillance programs (Czech, Slovak NPPs)
- Experience with the development of methods for the irradiated sub-sized specimen preparation, testing and evaluation (e.g. SPT – Small Punch Tests)
- Experience with the grant project preparation and realization (Czech national grant projects)

UJV REZ, INTEGRITY AND TECHNICAL ENGINEERING DIVISION

NUCLEAR RESEARCH INSTITUTE

Providing comprehensive services in the field of ageing management and development of components and documentation, especially for the mechanical components of NPPs

- Evaluation of components strength and service lifetime
- Components qualification
- Design and implementation of ageing management programs including supporting IT applications
- Development and manufacture of necessary experimental equipment
- Implementation of technical and economic studies
- Research and development of new techniques and methodologies

DIVISION KEY SERVICES

- **Components design and qualification**
- **Determination of the current status of components**
  - Operational inspections and their qualifications
  - Mechanical testing of surveillance materials
  - Non-destructive testing of material properties
- **Prediction of components degradation**
  - Material testing for determination of degradation mechanisms
- **Evaluation of component reliability and safety in accordance with normative technical documentation and standards**
  - Strength calculations
  - Confirmation of component proper function
  - Qualification testing
- **Development of ageing management programs**

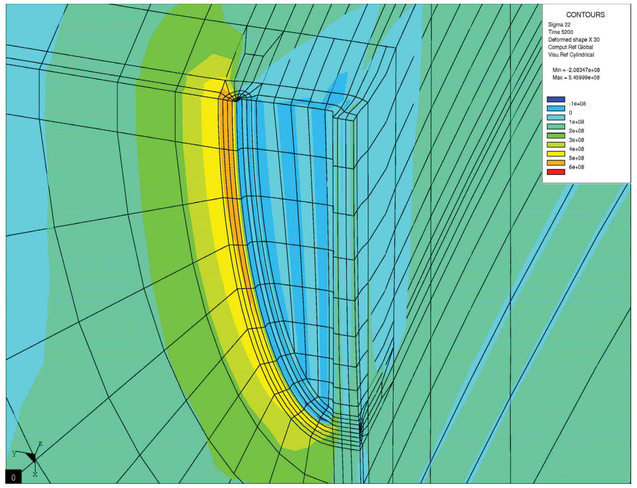

MECHANICAL AND CORROSION TESTING DEPARTMENT

- Focus mainly to mechanical testing and evaluation of the experimental results of Surveillance programs (Czech, Slovak NPPs)
- Development and design of irradiation probes for NPPs reactors
- Reactor pressure vessels VVER 440 a VVER 1000
- **NPP Czech Republic**: Dukovany (VVER 440 – 4 units) and Temelín (VVER 1000 – 4 units)

- **NPP Slovakia**: Jaslovské Bohunice (VVER 440 – 2 units) and Mochovce (VVER 440 – 3 units)

EXPERIMENTAL INFRASTRUCTURE

- **21 Hot and 23 semi-hot cells** (Division integrity and technical engineering)
  - Hot cells *(cze. „horká komora“)* – **abbr. „HK“ –** shielded by 1.25m of heavy concrete
  - Semi-hot cells *(cze. „polohorká komora“)* – **abbr. „PHK“ –** shielded by 150 mm of lead

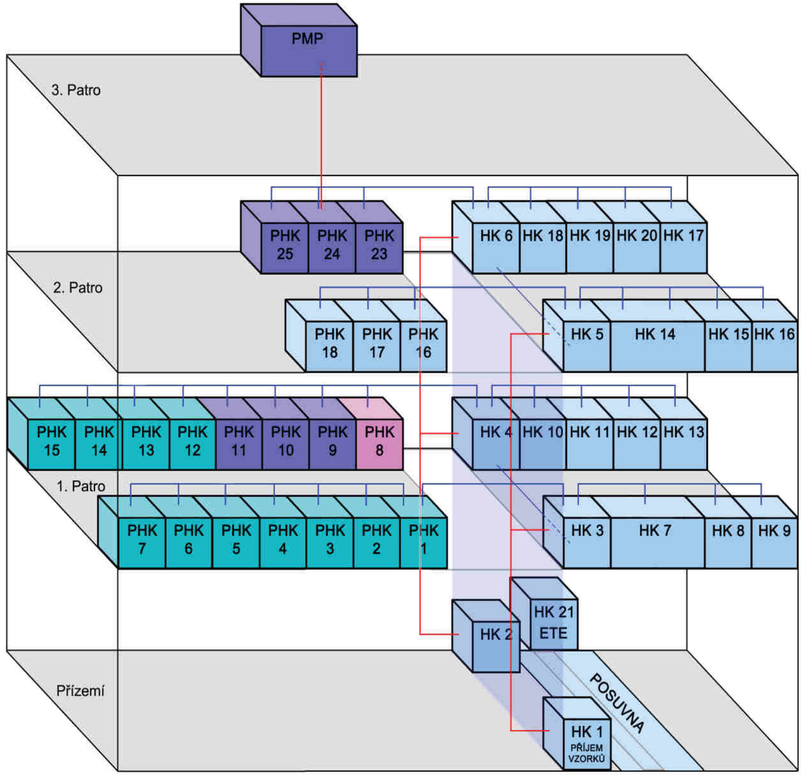

ACCREDITATION

- Laboratories are accredited in accordance with ČSN EN ISO/IEC 17025:2018 (Czech Institute for Accrediation)
- Mechanical and Corrosion Testing Department
- Support of the NPP Operation Department

L 1093.2

L 1093

EA MLA Signatory
Český institut pro akreditaci, o.p.s.
Olšanská 54/3, 130 00 Praha 3

issues

according to section 16 of Act No. 22/1997 Coll., on technical requirements for products, as amended

CERTIFICATE OF ACCREDITATION

No. 581/2022

ÚJV Řež, a. s.
with registered office Hlavní 130, Řež, 250 68 Husinec, Company Registration No. 46356088

to the Testing Laboratory No. 1093
Mechanical Properties Testing Laboratory

Scope of accreditation:

Static fracture toughness tests, dynamic fracture toughness tests, impact bending tests, tensile tests, conventional yield point, bending, fatigue and hardness tests and punch tests to the extent as specified in the appendix to this Certificate.

This Certificate of Accreditation is a proof of Accreditation issued on the basis of assessment of fulfillment of the accreditation criteria in accordance with

ČSN EN ISO/IEC 17025:2018

In its activities performed within the scope and for the period of validity of this Certificate, the Body is entitled to refer to this Certificate, provided that the accreditation is not suspended and the Body meets the specified accreditation requirements in accordance with the relevant regulations applicable to the activity of an accredited Conformity Assessment Body.

This Certificate of Accreditation replaces, to the full extent, Certificate No.: 394/2021 of 20. 7. 2021, or any administrative acts building upon it.

The Certificate of Accreditation is valid until: 13. 11. 2023

Prague: 2. 12. 2022

Český institut pro akreditaci, o.p.s. -3-

Jan Veltšek
Director of the Department
of Testing and Calibration Laboratories
Czech Accreditation Institute
Public Service Company

RESEARCH PROJECTS PARTICIPATION

- **HORIZON**
  - **FRACTESUS**
  - Fracture mechanics testing of irradiated RPV steels by means of sub-sized specimens
  - **STRUMAT-LTO**
  - Structural Materials for Nuclear Safety & Longevity
  - **INCEFA-SCALE**
  - INcreasing safety in NPPs by Covering gaps in Environmental Fatigue Assessment - focusing on gaps between laboratory data and component SCALE
  - **ENTENTE**
  - European Database for Multiscale Modelling of Radiation Damage
  - **DELISA-LTO (since 1.6.2022)**
  - DEscription of the extended LIfetime and its influence on the SAfety operation and construction materials performance – Long Term Operation with no compromises in the safety

EAF AT UJV REZ

- **6 autoclaves with water loop for unirradiated and irradiated properties quantification (CGR, SSRT, EAF)**
- **EAF tests – 2 autoclaves with circulation water loop**
- **For un-irradiated materials only!**
  - Ongoing tender for the new EAF/SCC/SSRT autoclave for the hot cell application (commisioning expected 2024)
- **INCEFA SCALE HORIZON 2020 (2020-2025)**
- **EAF TACR – Czech National Grant Project (Technology Agency of Czech Republic)**
  - Focused on the EAF for the various RPV cladding and weld materials

EAF AT UJV

- **Autoclave P2,**
- Heated autoclave vessel with circulation water loop and hydraulic loading system,
- Parameters:
- Autoclave vessel volume: 1,6 l
- Max. temperature: 320°C, 13 MPa
- Max. load: 30 kN
- Max. flow rate: 6 l/h
- On-line monitoring: temperature, pressure, load, flow rate, displacement, conductivity (outlet/inlet), O2 concentration (inlet/outlet), electrochemical potentials, dc potential drop technique for crack length measurements
- Test possibilities:
- CGR – cycle f < 0,05 Hz, sin, triangle, sawtooth; constant load
- SSRT – up to 10-8 s-1, maximum deformation 20 mm
- EAF – f < 0,05 Hz, R = -1

EAF IN UJV

- **Autoclave P6,**
- Heated autoclave vessel with circulation water loop and integrated bellows loading system,
- **Parameters:**
- Autoclave vessel volume: 0.7 l
- Max. temperature: 320°C, 12.5 MPa
- Max. load: ±12 kN
- Max. flow rate: 2 l/h
- On-line monitoring: temperature, pressure, load, flow rate, displacement, conductivity (outlet/inlet), O2 concentration (inlet/outlet)
- Test possibilities:
- Only for EAF – f < 0,05 Hz, R = -1

OPEN ACCESS TO JRC RESEARCH INFRASTRUCTURES

- **Objectives**
  - The main objectives of opening up access of JRC physical research infrastructures are to:
  - Establish a fair, clear and transparent procedure for giving access of external users to JRC physical research infrastructures
  - Maximise the use to the full potential of JRC physical research infrastructures in collaboration with researchers and industry from EU Member States, countries associated to the EU Research Programme Horizon Europe.
- **Benefits to users**
  - The program benefits Open Access (OA) participants (necessary high-quality data that the participant cannot obtain from their own sources, e.g. due to capacity, as well as personal participation in the implementation of activities in JRC laboratories), but also benefits JRC (inter-laboratory comparison, exchange of experience).

OPEN ACCESS TO JRC RESEARCH INFRASTRUCTURES

NUCLEAR RESEARCH INSTITUTE

- For all important information visit the official website:
- https://joint-research-centre.ec.europa.eu/tools-and-laboratories/open-access-jrc-research-infrastructures_en
- Write the **Proposal Submission Form:**
- General Information,
- Administrative data of participating organisation,
- Scientific Implementation (scientific and technical value; originality and innovation; Dissemination and exploitation plan; Quality of the proposing team - CV),
- Collaboration and access to new users ,
- Strategic relevance to the JRC,
- Strategic importance to Europe.
- **User Travel and Subsistence Form:**

European Commission | Access to JRC Physical Research Infrastructures
Proposal submission form: **Relevance-driven**

Proposal Submission Form

1. General information

Call ID number	2021-1-RD-EMMA-AMALIA
Proposal full title	Environmentally Assisted Fatigue of Cladding Weld Materials
Proposal acronym	ENAFCLAD
Research Infrastructure	AMALIA, JRC PETTEN
Re-submission	YES ☐ NO X
Contacted the Research Infrastructure during preparation of the proposal?	YES X NO ☐

Abstract

UJV and JRC have both been participating in the H2020 project INCEFA+ and are participating in the following project INCEFA-SCALE. Both projects are investigating EAF of austenitic base metals used in European PWRs.

NPP components and components covered by cladding weld material as well usually encounter fluctuating thermal stresses due to start-ups and shut-downs of the plant and due to thermal transients during operation of the plant. These thermal gradients introduce low cycle fatigue (LCF) damage at thick sections of the component. Hence, understanding the LCF behaviour of cladding weld materials is an important concern in plant operation. UJV focuses on testing of cladding weld materials used in VVERs.

There is a strong interest from the UJV side to increase confidence in their data by conducting the LCF tests in laboratories such as JRC, a well-known institute disposing of the unique and high-quality infrastructure.

1

OPEN ACCESS TO JRC RESEARCH INFRASTRUCTURES

- After approval of the proposal - **RESEARCH INFRASTRUCTURE ACCESS AGREEMENT –** good to contact person from laboratory and communicate the experimental capacity of the laboratory,
- Experimental material, manufacturing of the testing specimens, preparation of the chemical environment is on **USER**.

OA ENAFCLAD PROJECT

- UJV Rez has a similar facility with 2 autoclaves able to perform low-cycle fatigue tests in water environment or in air as well,
- Devices are fully oocupied by other national EAF project and the international INCEFA-SCALE project,
- The main objective of the proposed project is to compare autoclaves in UJV and JRC and verify test results from the UJV autoclave,
- The results will be compared for to evaluate inter-laboratory comparison.
- Another objective is to increase the results comparability and clarity using the approach harmonization in both laboratories

OA ENAFCLAD

- **ENAFCLAD – Environmentally Assisted Fatigue of Cladding Weld Metal**
- Conduct environmentally assisted fatigue tests on VVER relevant material in VVER water model environment to increase credibility of the data obtained at UJV Rez, a. s. test facility by conducting the same tests in JRC,
- Experimental program is executed as an interlaboratory study with the goal of the results comparability enhancement,

OA ENAFCLAD

- The same geometry of the testing specimens in experimental program (UJV type),
- Specimens with nominal diameter of 5 mm and nominal gauge length of 15 mm, surface of the specimens polished to Ra0,2

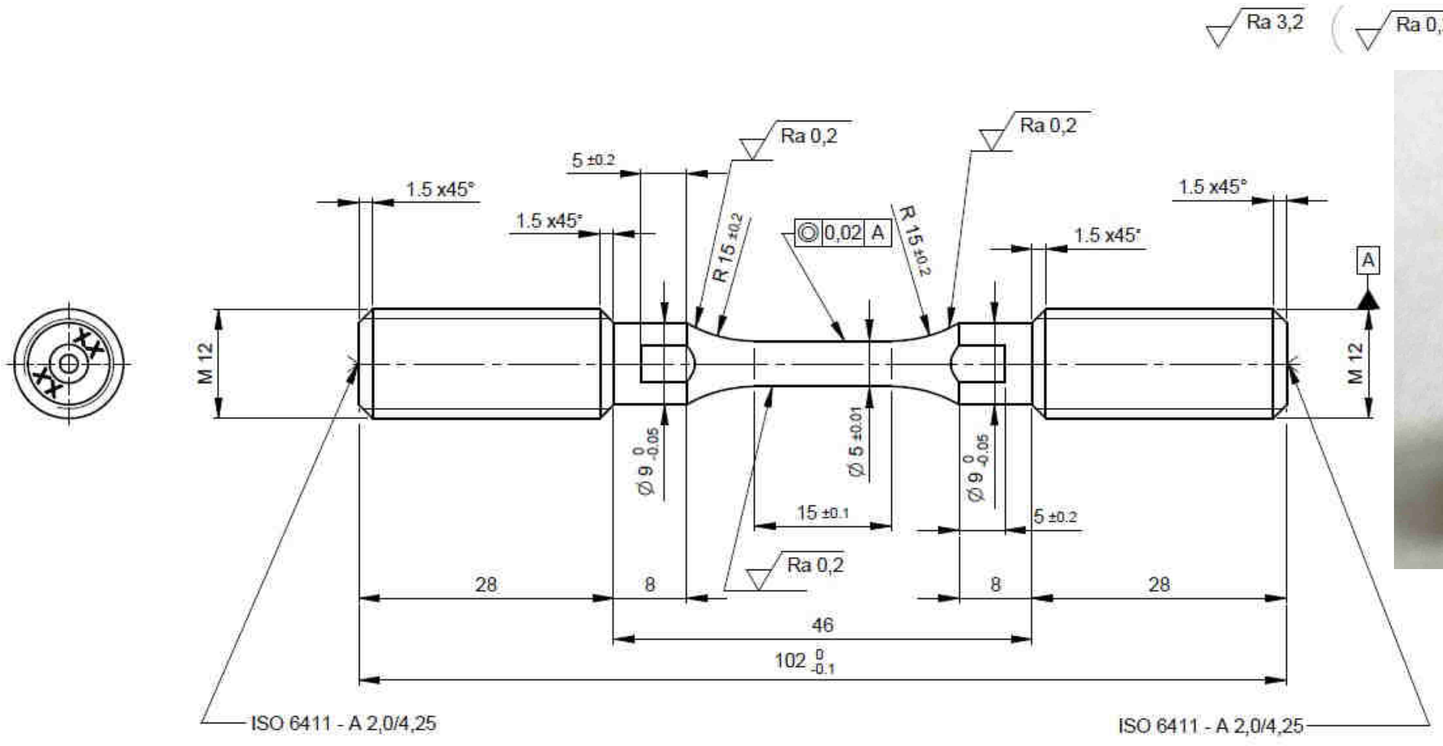

OA ENAFCLAD

- 18 successful tests are planned in OA ENAFCLAD - (9 in Autoclave 1 in JRC, 9 in Autoclave P6 in UJV),
- The same testing parameters – Strain amplitude, Strain rate, Temperature, Pressure
- Test is strain controlled, the strain waveform is triangular without hold times,
- Strain rates and strain amplitudes were selected with respect to the available results from the Users database on cladding stainless steel materials in VVER primary water and with respect to the User Stay Days in JRC,
- Water chemistry composition:

Boric acid	Potassium hydroxide	Ammonia	Conductivity
H_3BO_3	KOH	NH_3	k
5 g/l	21,0 mg/l	12,4 mg/l	80-110 µS/cm

OA ENAFCLAD

- **Fractographic analyses** on SEM will be realized in Structural Properties and Corrosion Department in UJV (no capacity in JRC),
- **Chemical composition** of the testing environment – Central Analytical Testing Laboratory (accredited testing laboratory) in UJV – sampling of the environment is after stabilization of the testing parameters and then after completing the test,
- **Flouroplastic sample containers** – due to minimization of influence of the sample container material on analyzed chemical composition of testing environment (prevent the solution of Cl from standard PE containers)

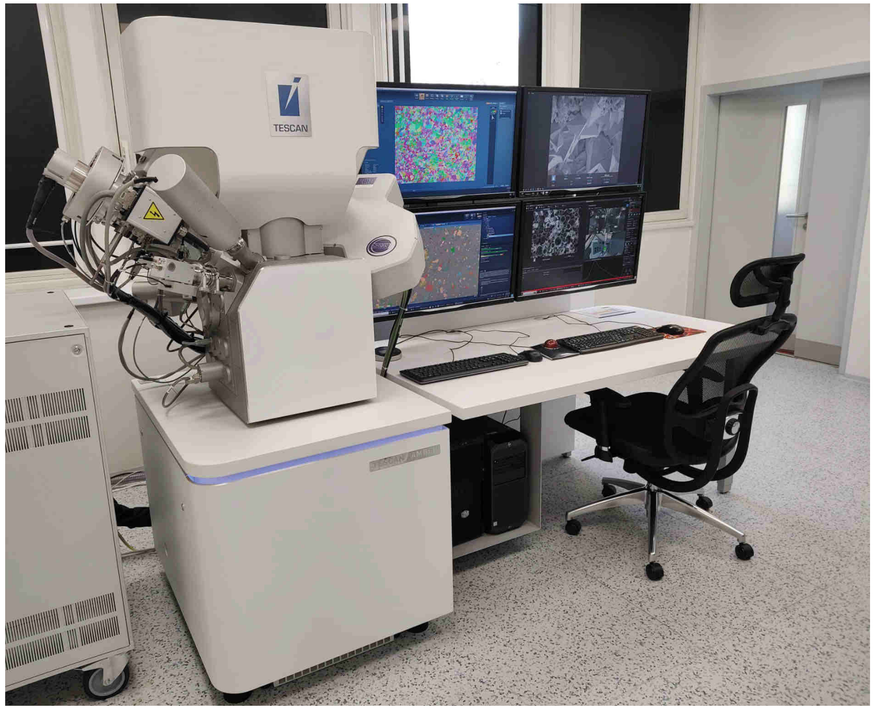

TESCAN AMBER (installed 2022)

OA ENAFCLAD

- Proposed test matrix and time schedule follow:

Specimen ID	Strain amplitude [%]	Strain rate [%/s]	Temperature [˚C]	Expected test duration [h]	Expected time schedule		Remarks
					Experiment started (week)	Experiment completed (week)	
ENA_13	±0,3	0,005	320	432	1	9	Phase 1
ENA_14	±0,3	0,005	320	432	11	18	Phase 1
ENA_15	±0,3	0,005	320	432	20	27	Phase 1
ENA_16	±0,6	0,005	320	144	32	35	Phase 2
ENA_17	±0,6	0,005	320	144	37	40	Phase 2
ENA_18	±0,6	0,005	320	144	42	45	Phase 2
ENA_19	±0,9	0,005	320	96	50	53	Phase 3
ENA_20	±0,9	0,005	320	96	55	58	Phase 3
ENA_21	±0,9	0,005	320	96	60	63	Phase 3
ENA_22	-	-	-	-	-	-	Substitute specimen
ENA_23	-	-	-	-	-	-	Substitute specimen
ENA_24	-	-	-	-	-	-	Substitute specimen

CONCLUSIONS

- JRC open access projects provide an unique opportunity for small-scale research projects and inter-laboratory studies realization.
- The ENAFCLAD project, realized at the EMMA-AMALIA lab (with great support of the Radek Novotny) is a good example of how inter-laboratory comparisons can be established.
- Project aims, in addition to obtaining new experimental data, to verify how laboratory procedures can be harmonized and what benefits this approach brings
- The following parameters have been harmonised in the project
  - identical geometry of the specimens, manufactured at the same site with identical technology, approach to determining calibration constants, identical material, uniform chemical environment (including regular media sampling and use of fluoroplastic containers)
  - The ENAFCLAD project will be finished in May 2024

Thank you very much for the attention!

NUCLEAR
RESEARCH
INSTITUTE

ÚJV Řež, a. s.
Hlavní 130, Řež
250 68 Husinec, Czech Republic

e-mail: ivana.schnablova@ujv.cz
www.ujv.cz

UJV Group
PEOPLE I INNOVATION I TECHNOLOGY