Component-Level Thermal Fatigue Testing

A survey of previous and current testing

Thomas M. Damiani, Ph.D.
Principal Technical Leader
EPRI Materials Reliability Program

INCEFA-SCALE Mid-term Seminar: ENVIRONMENTALLY ASSISTED FATIGUE WORKSHOP

September 20, 2023

© 2023 Electric Power Research Institute, Inc. All rights reserved.

EAF 101

- Definition – Enhanced fatigue degradation of pressure boundary materials from long-term exposure to LWR coolant environment
- History – First seen in Japanese testing in the early 80's; Some early EAF tests produced lower fatigue lives compared to both ASME and JSME air design fatigue curves
- What drives EAF? – Sensitive to
  - High fluid temperature (>200 C)
  - Dissolved Oxygen (water) and sulfur (material) content
  - Slow increasing strain rates during cycling

© 2023 Electric Power Research Institute, Inc. All rights reserved.

Air vs. LWR Specimen Fatigue Testing

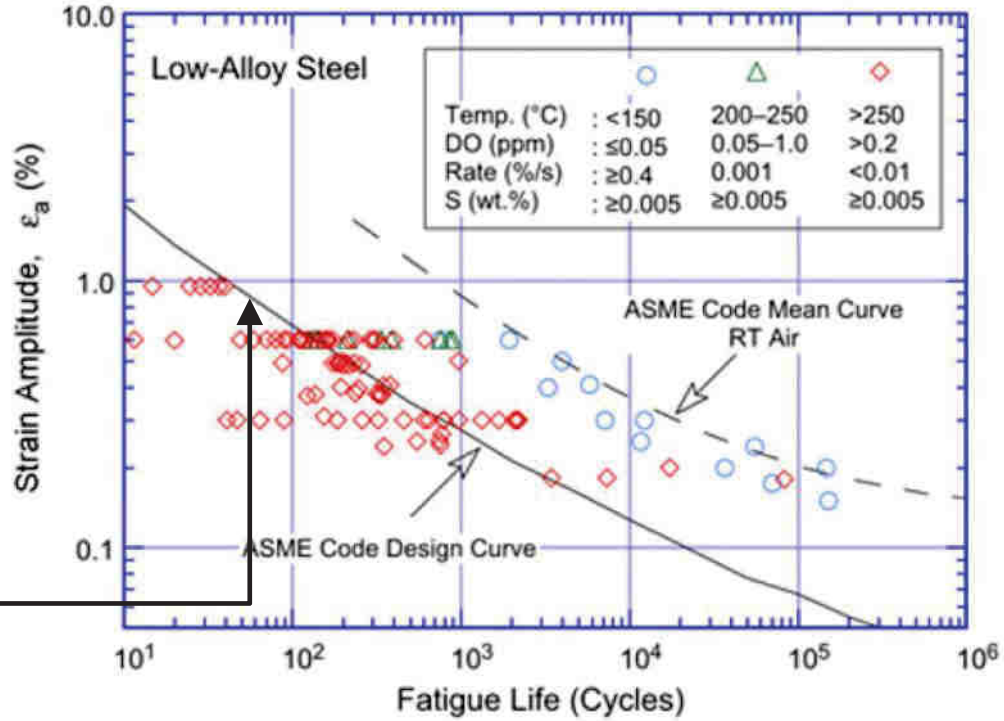

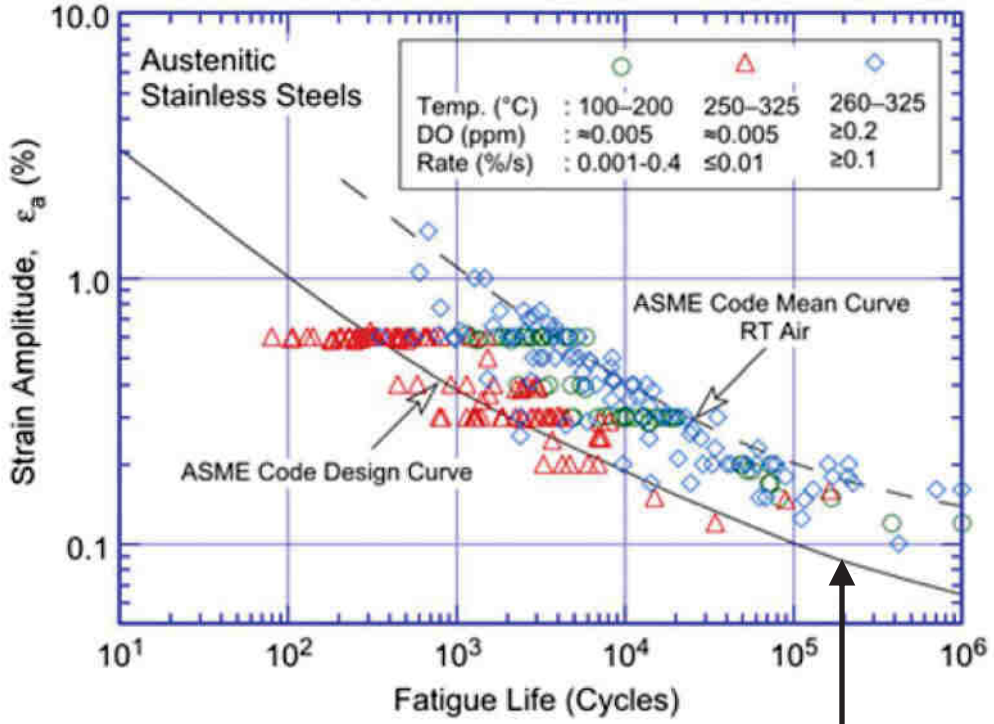

Figure 1-1 Fatigue ε–N data for low-alloy steels and austenitic SSs in water compared to the ASME Air Design Curve; RT = room temperature [77°F (25°C)].

- Design curves were the greater of factors of 2 on stress or 20 on cycles
- Factors originally intended to account for an “environment” based on air testing
- Testing in LWR environment and elevated temperatures revealed degradation below the design curve

© 2023 Electric Power Research Institute, Inc. All rights reserved.

EAF operational concerns

- To date, there has been no documented instance of a fatigue failure in an operating LWR plant for anticipated service loadings where LWR coolant environmental effects were the primary cause.

So why the concern?

- License renewals and new designs in the US require EAF evaluation per NRC regulation (Reg. guide 1.207)
- 60 year renewals - Impact has (mostly) been absorbed for 60 year life extensions through refined fatigue assessments using current methods.
- 80 year renewals – EPRI BWR study showed 85% of the 60 year evaluations meeting acceptance for 80 years
- Flex Ops (load following) long-term impact on fatigue

Currently this is a regulatory concern for the commercial nuclear industry

© 2023 Electric Power Research Institute, Inc. All rights reserved.

EPRI's EAF Approach (since 2012)

EAF Analytical Activities

- Identify and develop methods to reduce conservatism in existing design rules; Engagement with Intl. codes and standards
- Proposed changes intended to reduce conservatism in CUF_{en} and be easy to implement
- Two ASME Code Cases recently approved
  - N-902 – Life Factor/Gradient Factor Methodology (3002014121)
  - N-904 – Alternative K_e (3002014122)
- Databases on CUF_{en} calculations for license renewal (60 years and 80 projections)
  - PWRs – 3002018260
  - BWRs – 3002021227
- EPRI EAF Handbook coming in October 2023 – Will be publically available

EAF Testing Activities

- Understand and characterize critical environmental variables
- Several EPRI Projects to examine "separate effects"
  - Effect of Hold Times – 3002013213
  - Impact of Zinc injection – 3002020450
  - Multiaxial loading – 3002017811
- International collaboration (e.g., INCEFA-SCALE)
- ***Separate effects tests transitioning to large-scale "component" began in 2019***
- Testing to continue through at least 2024

© 2023 Electric Power Research Institute, Inc. All rights reserved.

Survey of Industry Component Testing

© 2023 Electric Power Research Institute, Inc. All rights reserved.

The Stepped Pipe Test (PVP2004-2748)

- Commissioned within the US Naval Nuclear program – 1980's

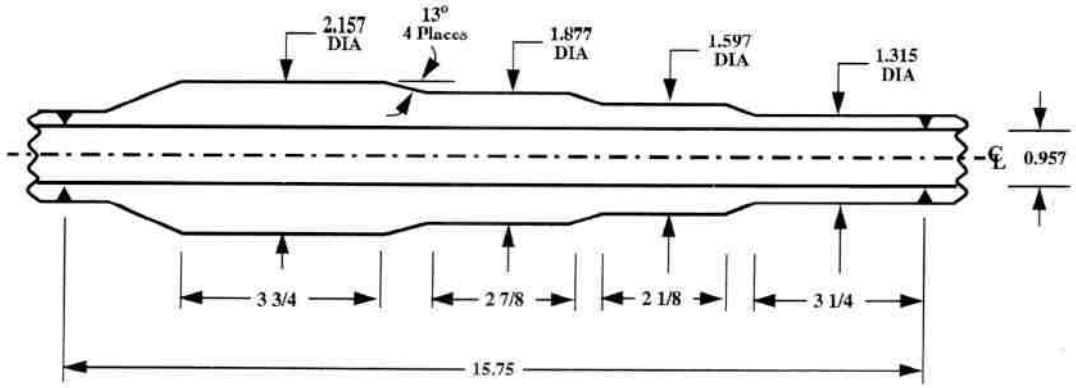

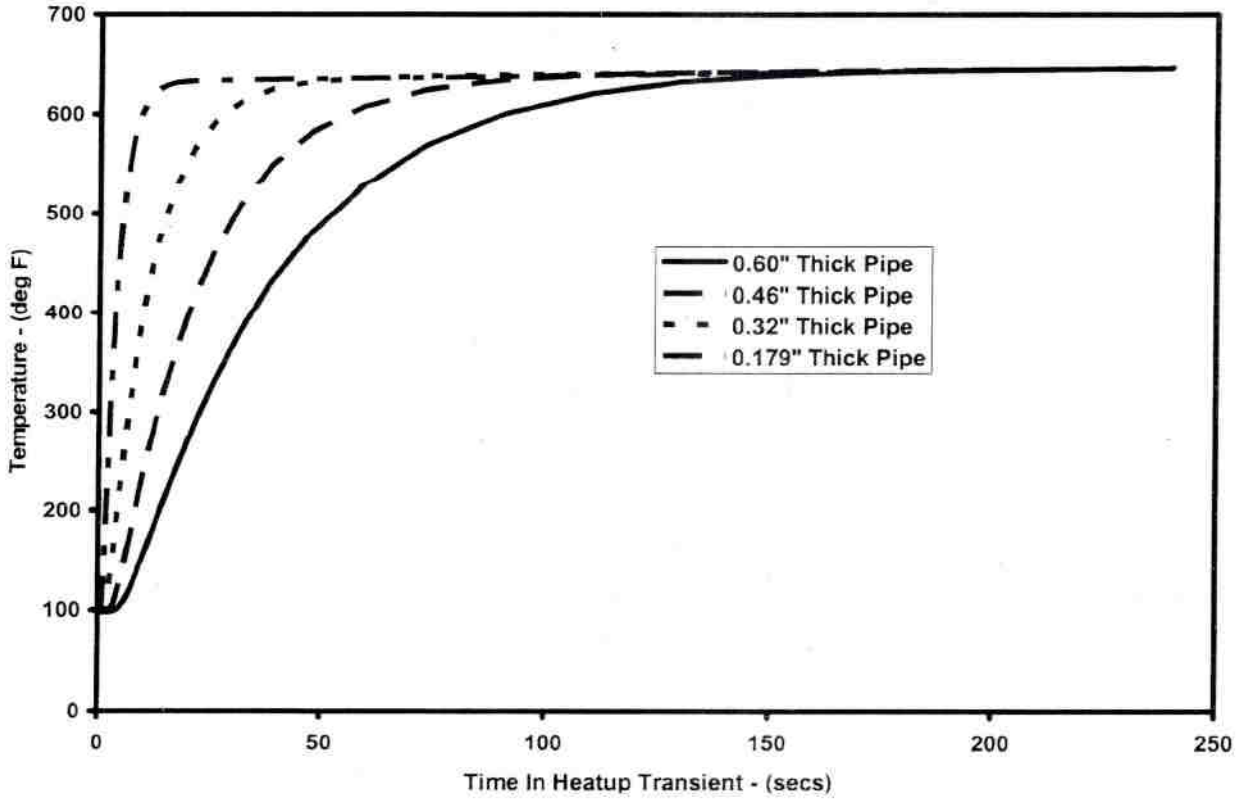

- Material – 304 stainless steel
- Pipes machined out of wrought material
- Two pipes in series within the test loop
- Pipes were pressurized at 17.2 MPa (2500 psi)
- Temperature cycled between 38°C (100°F) to 343°C (650°F) in three seconds
- Held at 343°C for 237 seconds
- Returned to 38°C in three seconds, and held for 237 seconds.

© 2023 Electric Power Research Institute, Inc. All rights reserved.

The Result…..

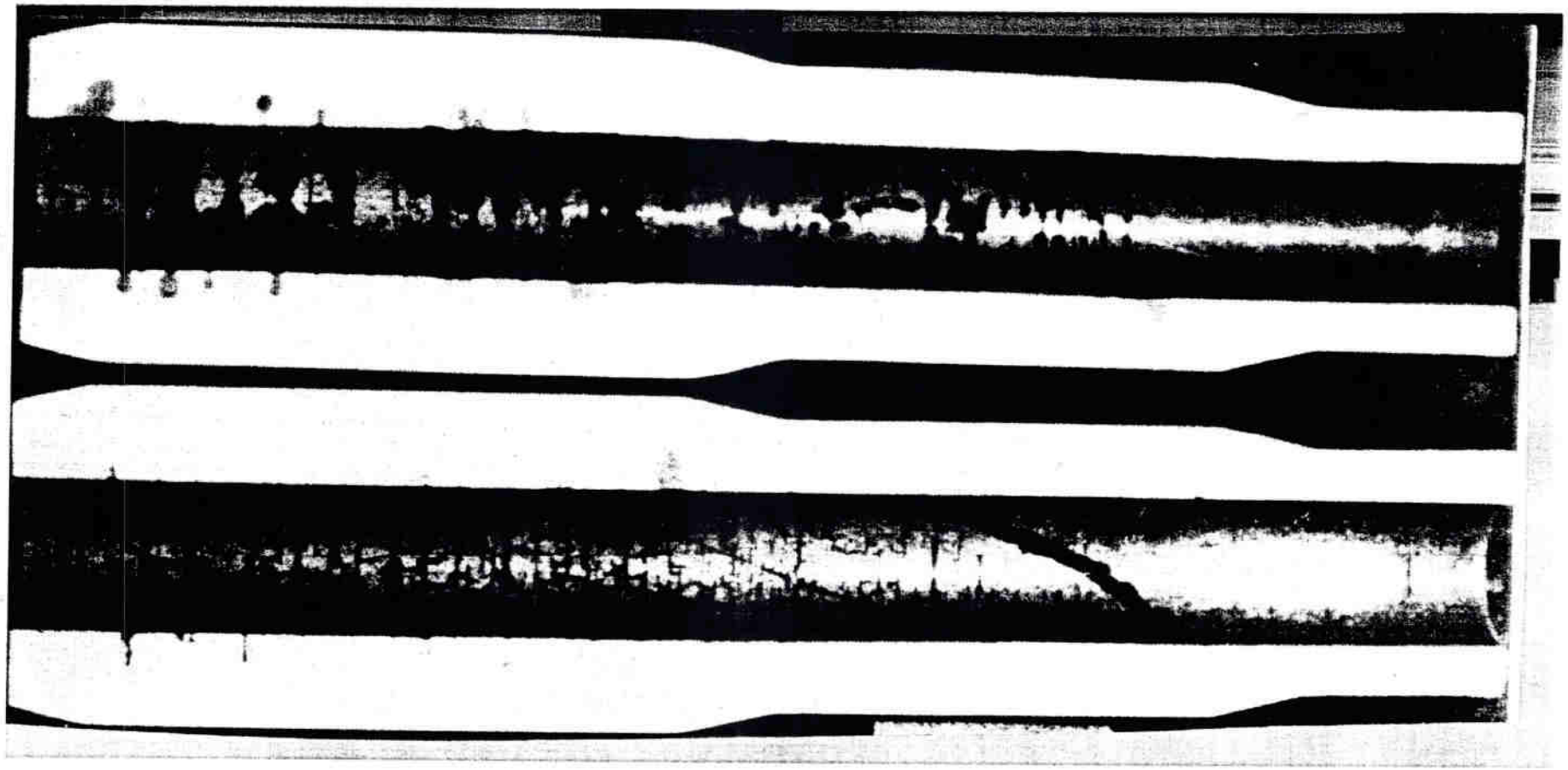

All data for crack initiation and growth rate determined from post-test examinations

© 2023 Electric Power Research Institute, Inc. All rights reserved.

NNL-Bettis Thermal Fatigue Test Loop (PVP2011-58024)

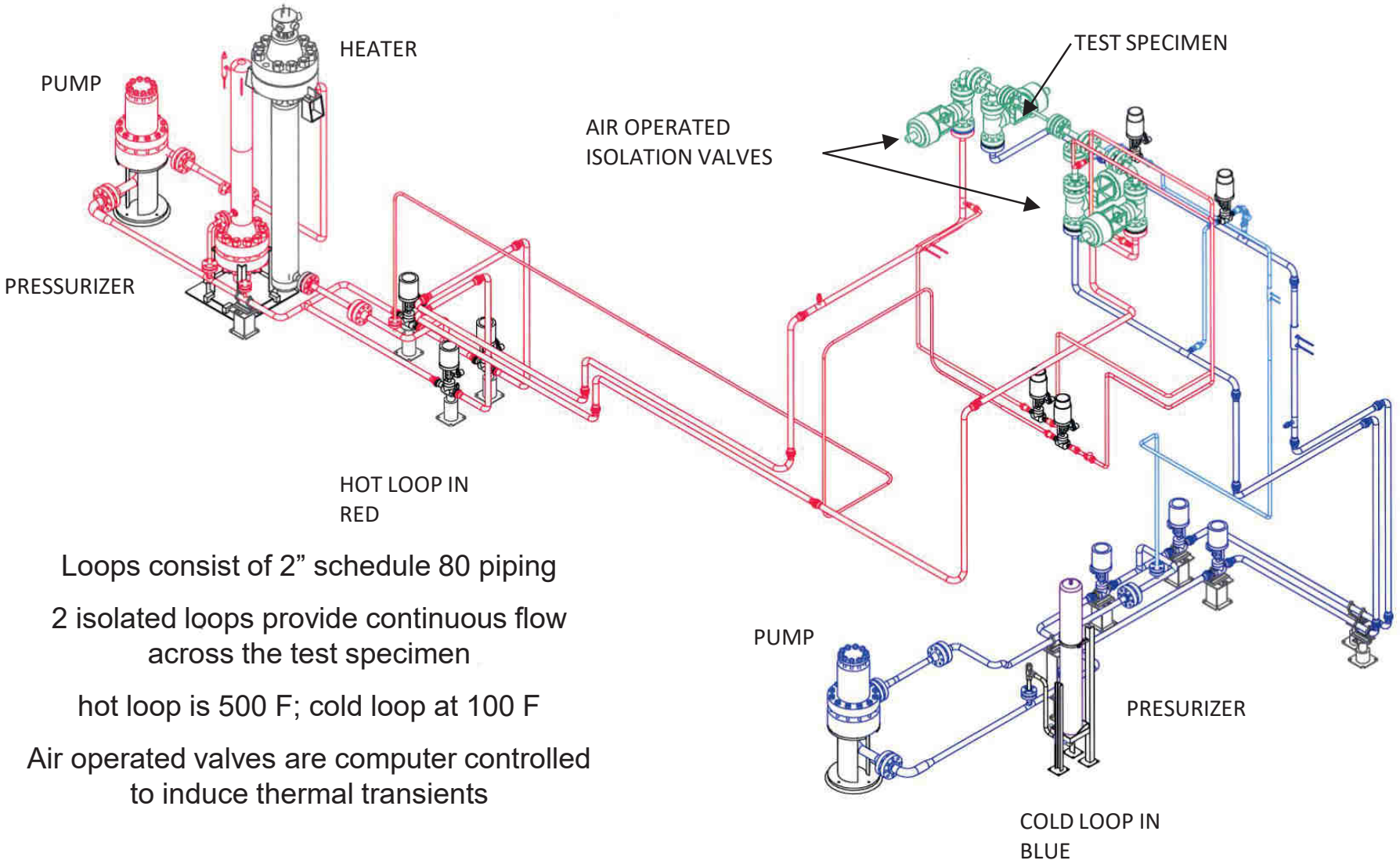

Loops consist of 2” schedule 80 piping

2 isolated loops provide continuous flow across the test specimen

hot loop is 500 F; cold loop at 100 F

Air operated valves are computer controlled to induce thermal transients

© 2023 Electric Power Research Institute, Inc. All rights reserved.

NNL-Bettis Thermal Fatigue Test Specimen

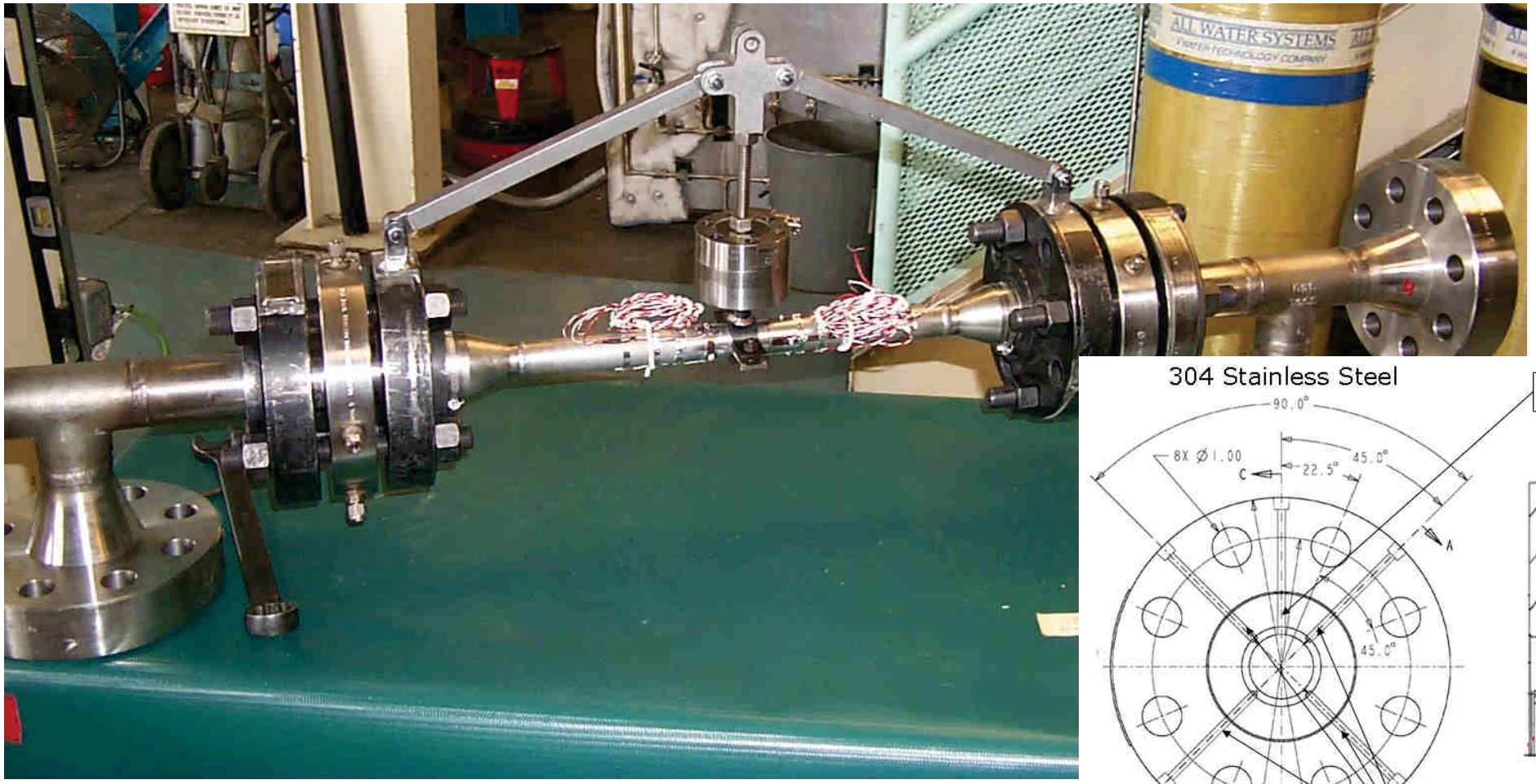

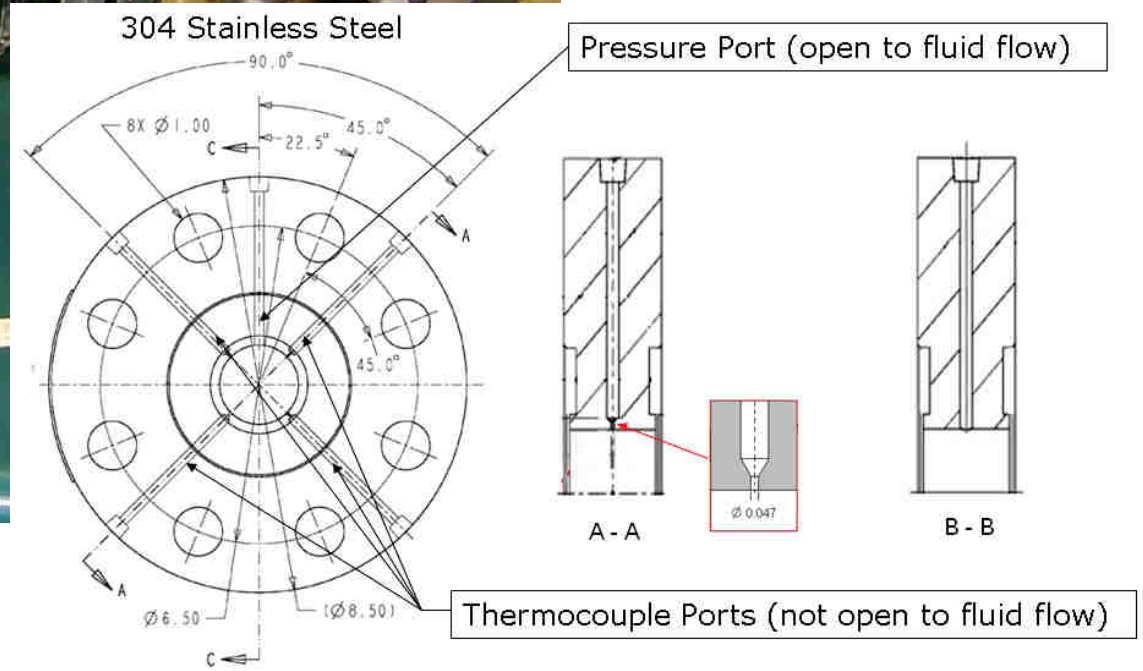

© 2023 Electric Power Research Institute, Inc. All rights reserved.

Axial aligned through wall crack

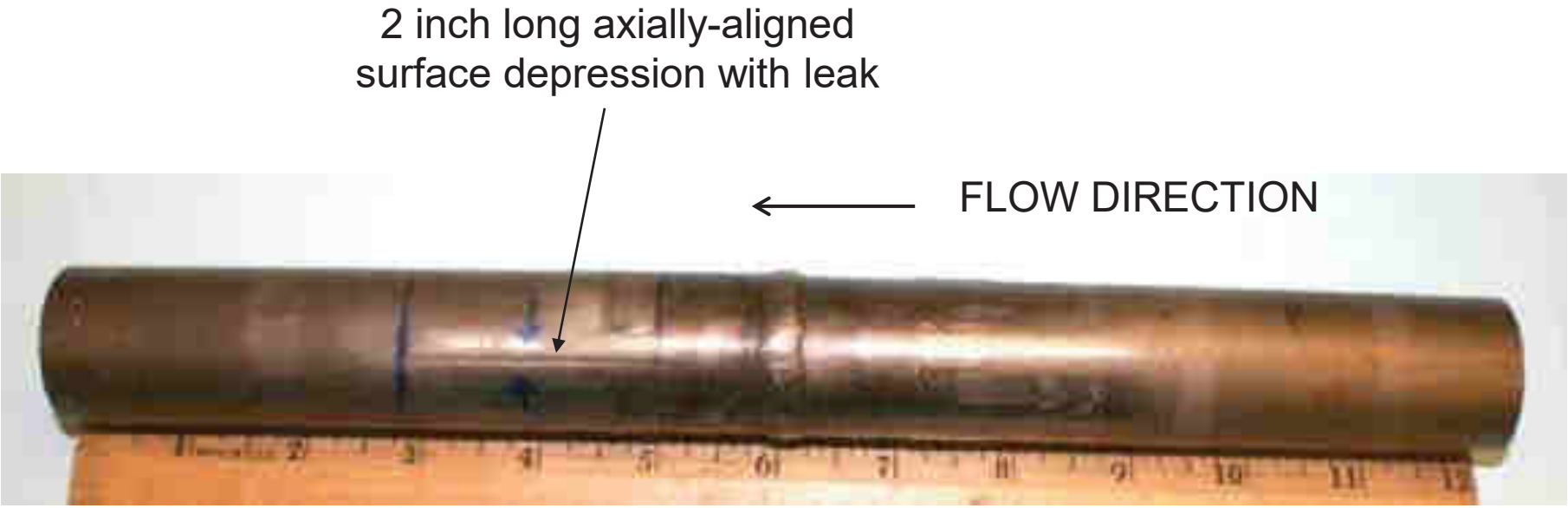

- 3 of 5 specimens cracked like this away from the weld – 17-19K cycles to leak
- DE of these cracks straight transgranular
- Attributed to combination of stratified flow and heat-to-heat surface variation

© 2023 Electric Power Research Institute, Inc. All rights reserved.
11

Inside pipe surfaces

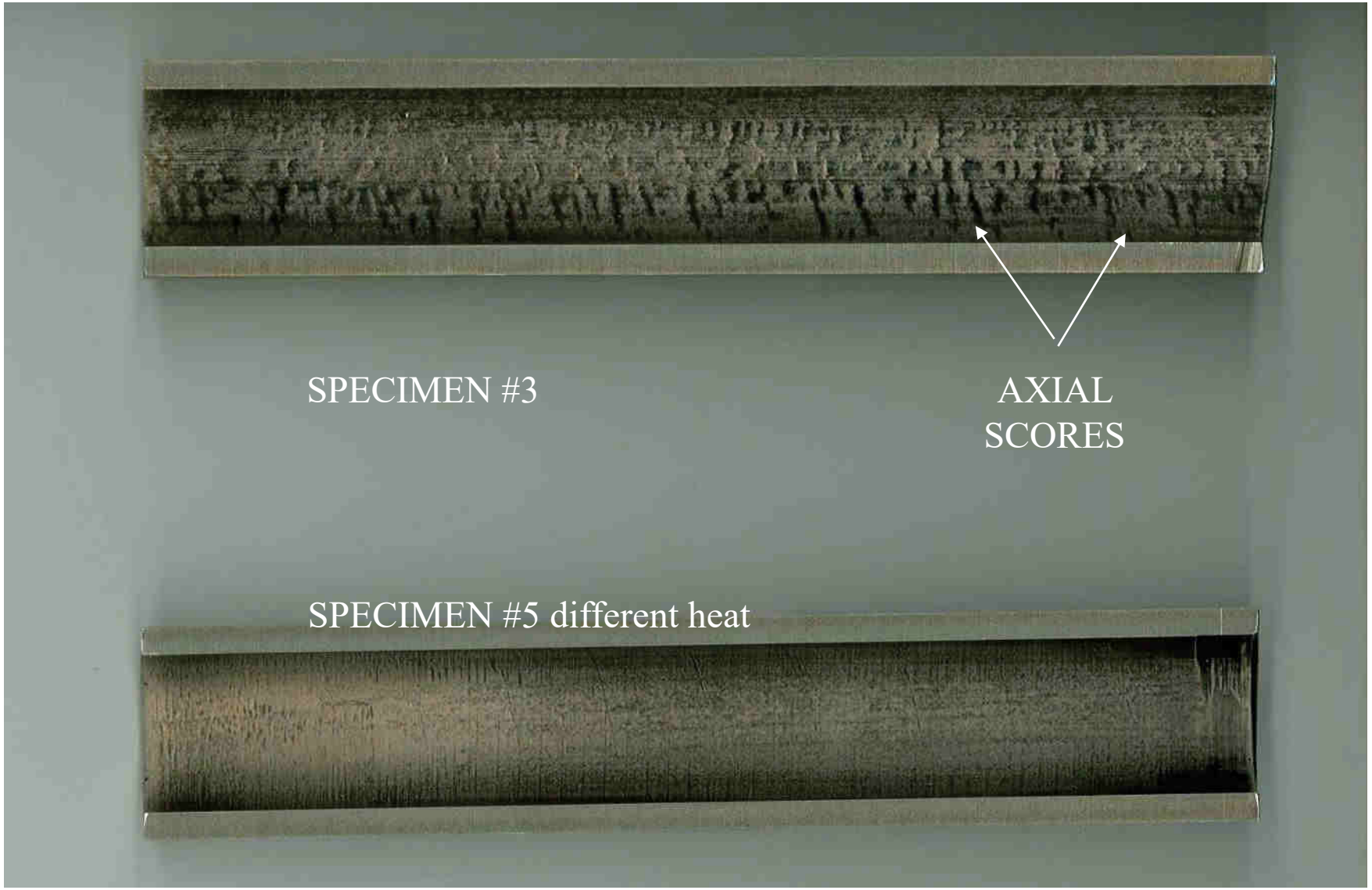

Cracked at 20K cycles

27K cycles with no leakage

© 2023 Electric Power Research Institute, Inc. All rights reserved.

Weld joint crack profile

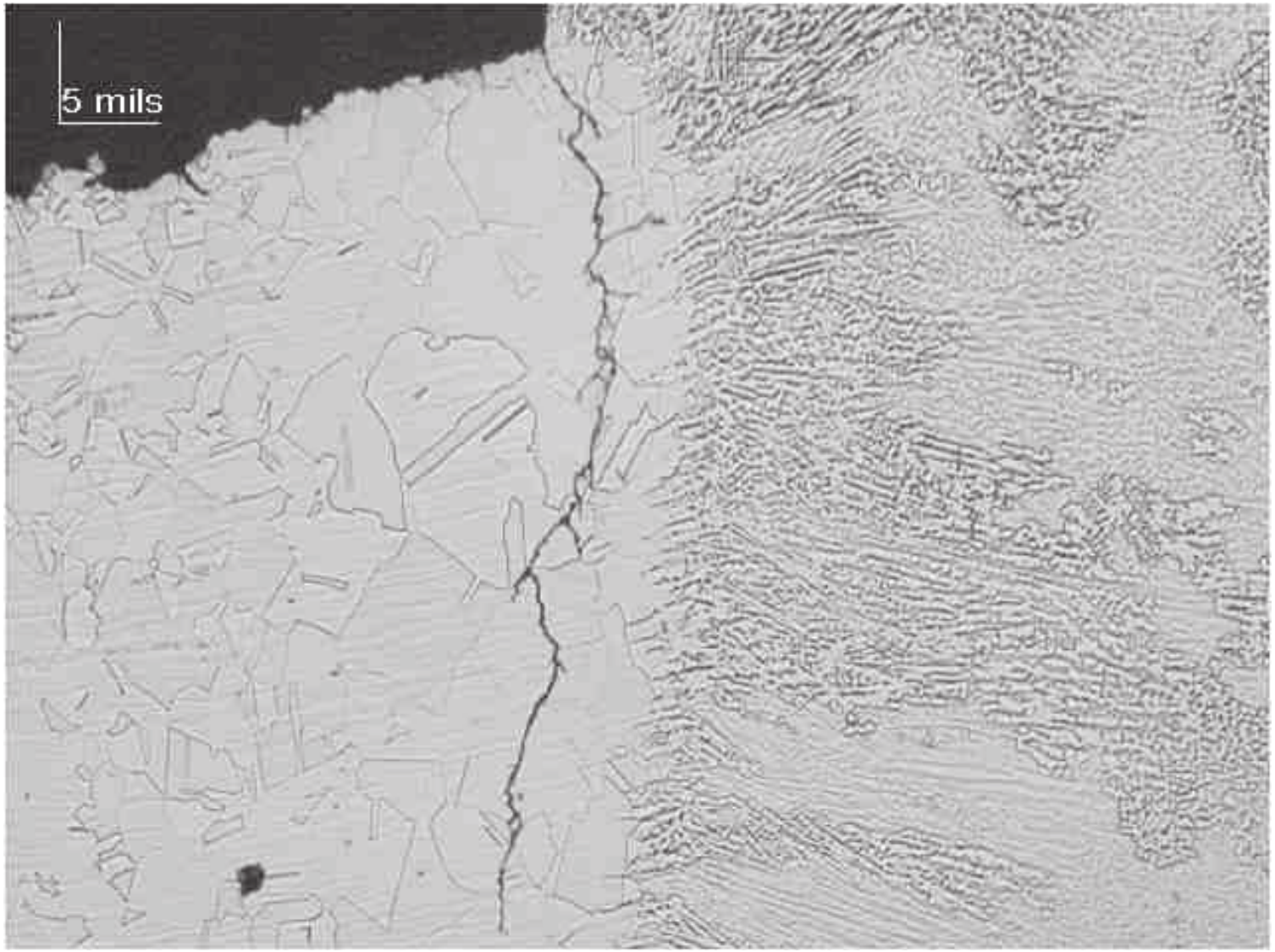

- Observed cracking around the girth weld toe – each side
- Cracking is fully circumferential
- Depth extent from 17-47 mils (0.4 – 1.2 mm) with 6000 cycles applied
- Branching seen and indicative of environmental effect
- Striation spacing estimated at 1.2e-5 in/cycle (3.0e-4 mm/cycle)

© 2023 Electric Power Research Institute, Inc. All rights reserved.

Instrumentation Spacer – the unintended test (PVP2007-26364)

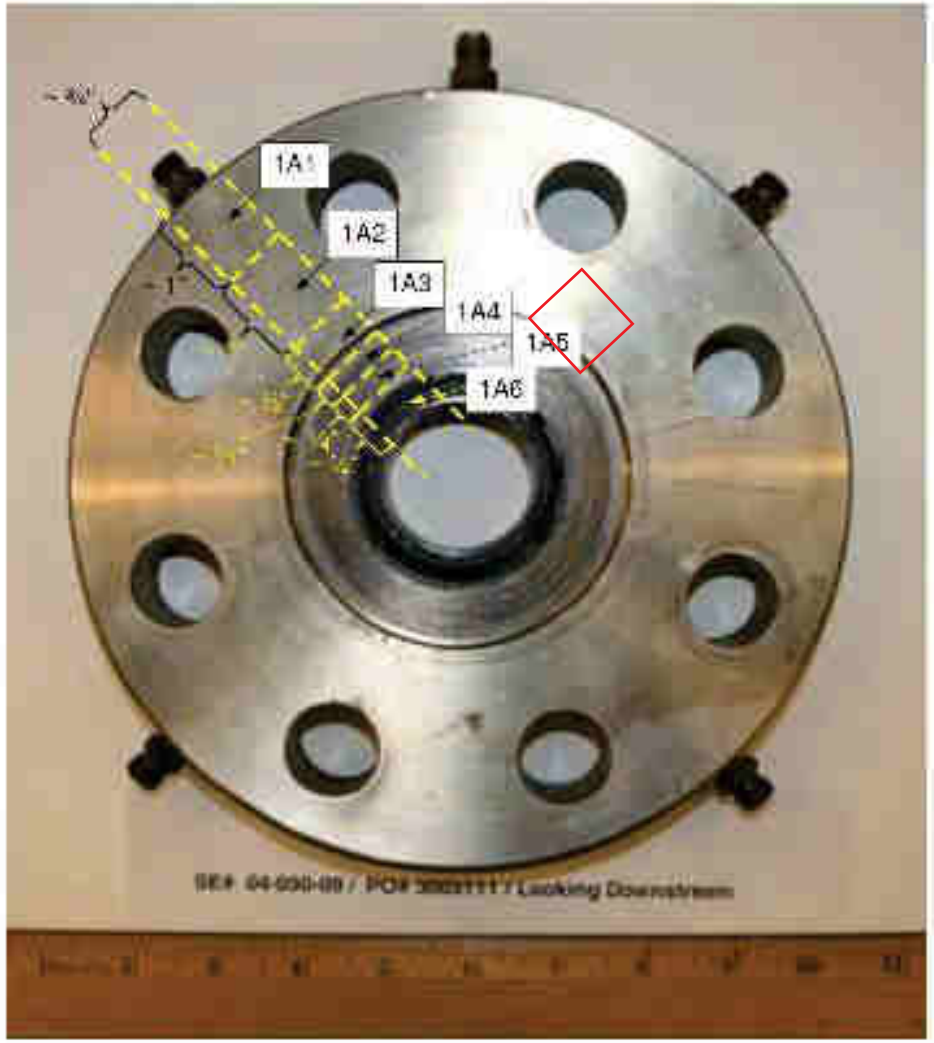

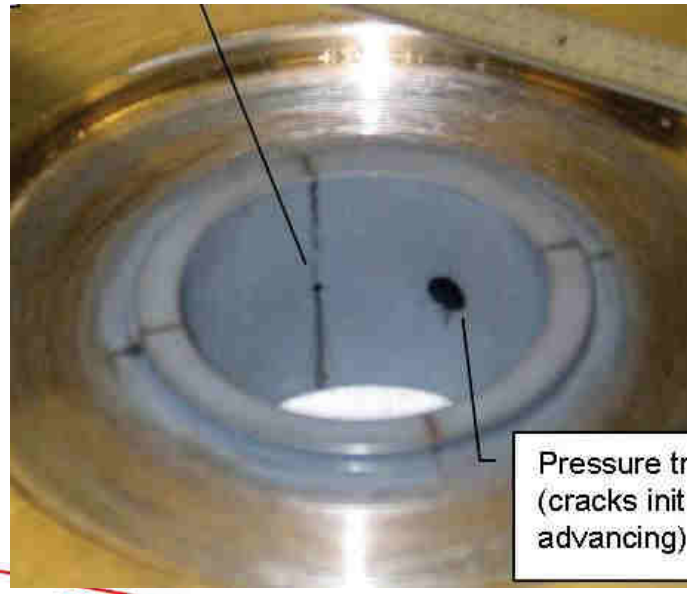

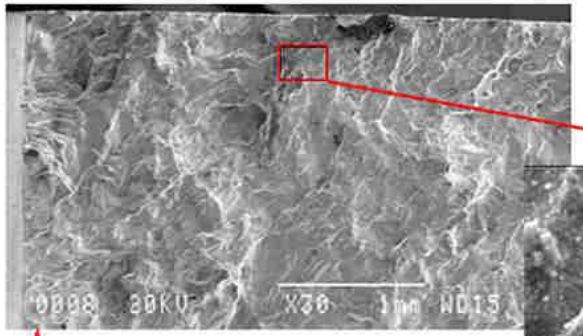

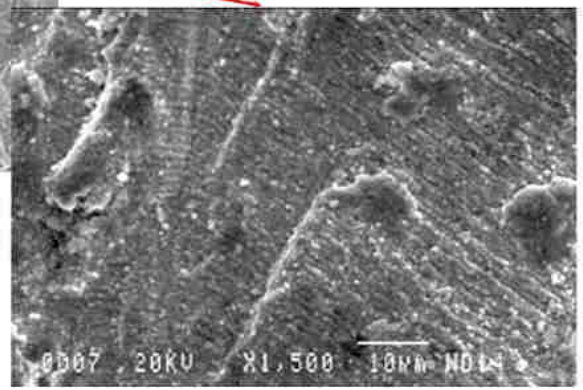

Striation Spacing found to be 3 to 4×10^{-5} inch/cycle

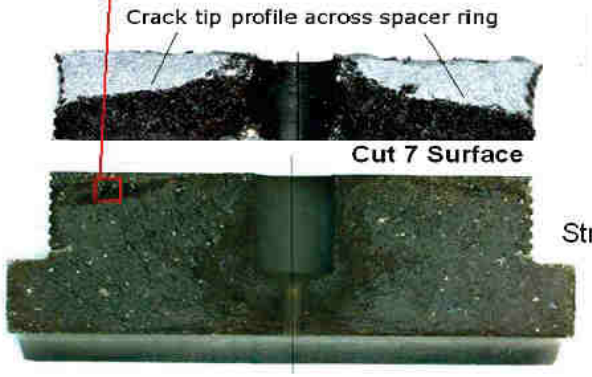

© 2023 Electric Power Research Institute, Inc. All rights reserved.

EAF Component Test

© 2023 Electric Power Research Institute, Inc. All rights reserved.

EAF Component Test Program Outline

- The component test program has 4 phases:

Phase 1: FEA Modelling and Design

- Define component parameters
- Define transient parameters
- Component FEA model outputs
- Predict fatigue behavior

Phase 2: Commissioning (YOU ARE HERE)

- Thermal and strain FEM benchmarking
- NDE calibration
- FEA alignment
- NDE crack sizing calibration
- Revise fatigue predictions

Phase 3: Testing

- Initiate fatigue cracks
- ET for crack detection
- Propagate fatigue cracks
- UT for crack growth monitoring
- Post-test examinations

Phase 4: Integration into FEA Models

- Calculate CUF (crack initiation)
- Calculate through-wall crack growth

ID – Crack Initiation

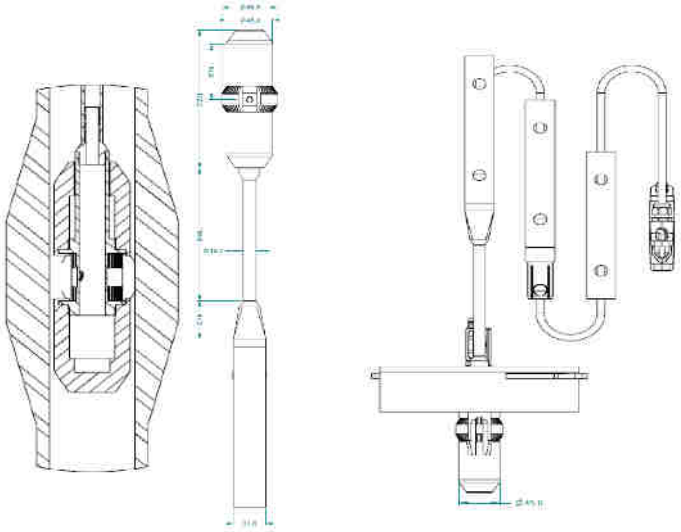

OD – Crack Propagation

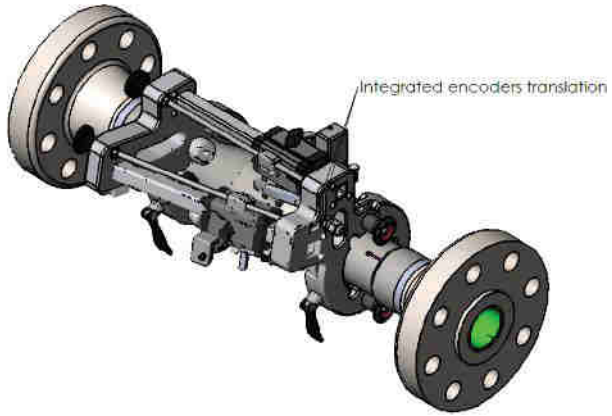

© 2023 Electric Power Research Institute, Inc. All rights reserved.

EAF Component Test 2023 Activities

Phase 2: Commissioning

- Test loop preparation for commissioning
  - A schematic of the test loop at Stern Laboratories in Hamilton, ON (Canada) will be reviewed in the upcoming slides.
- Test material characterization
- Specimen machining
- NDE calibration and baseline scanning of specimens

Test Loop

Component Test Fixture

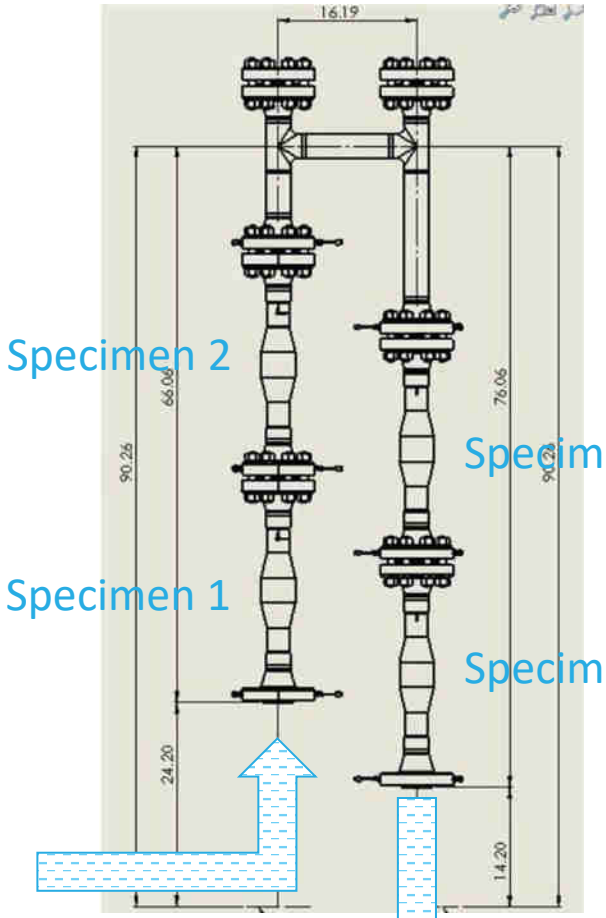

Specimen 2

Specimen 3

Specimen 1

Specimen 4

Water Flow

© 2023 Electric Power Research Institute, Inc. All rights reserved.

Test Loop Preparation

© 2023 Electric Power Research Institute, Inc. All rights reserved.

Stern Laboratories Test Loop

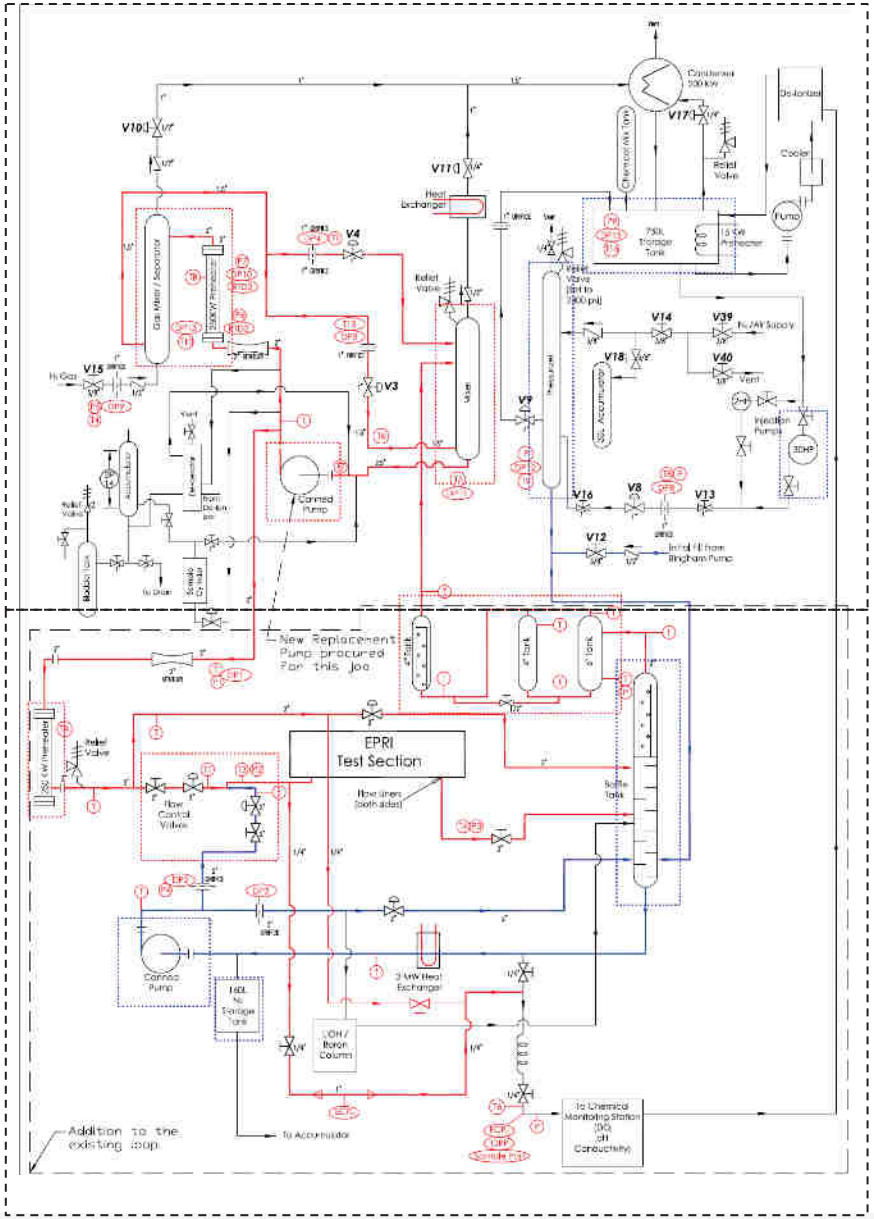

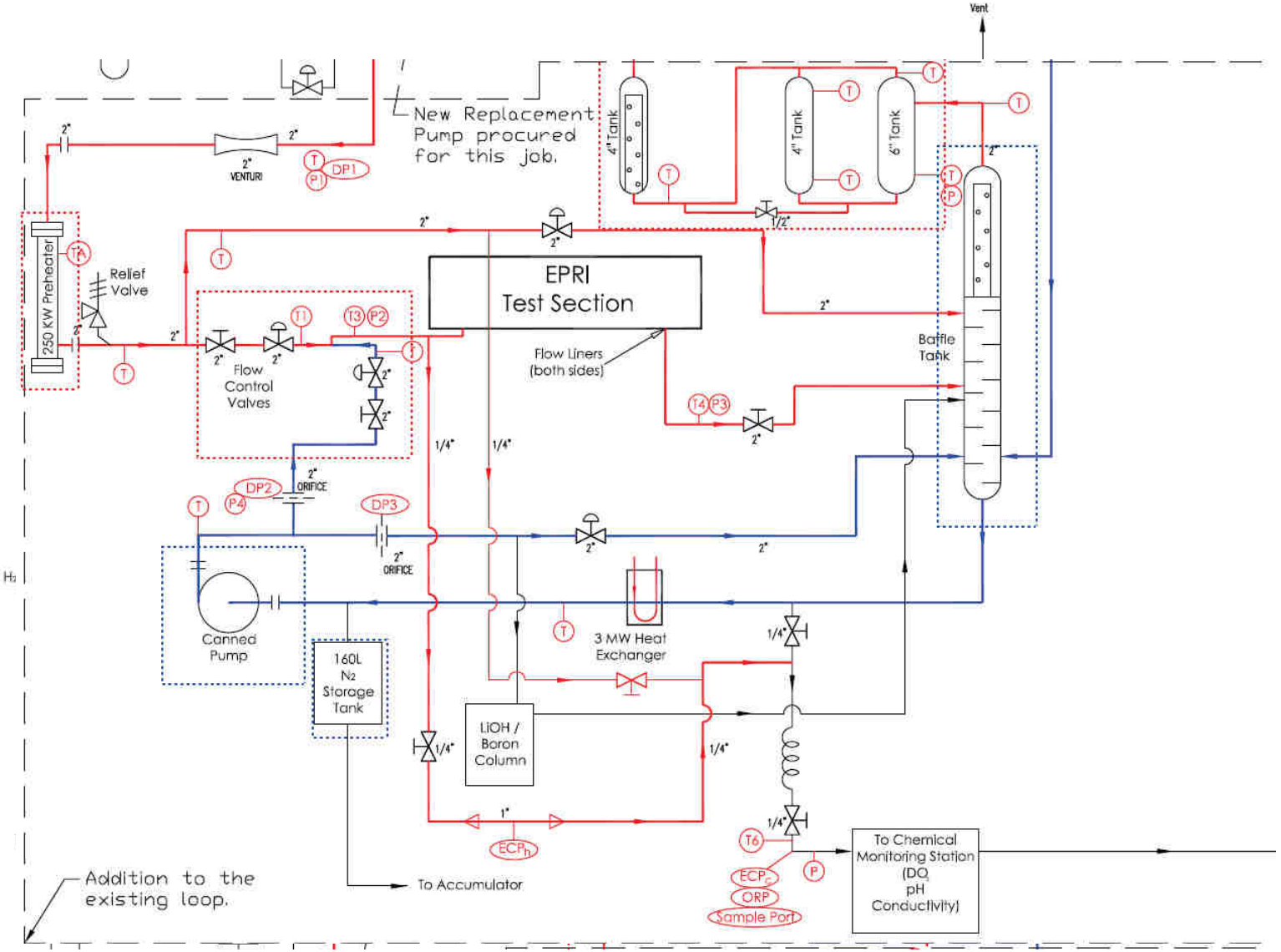

© 2023 Electric Power Research Institute, Inc. All rights reserved.

Loop Details

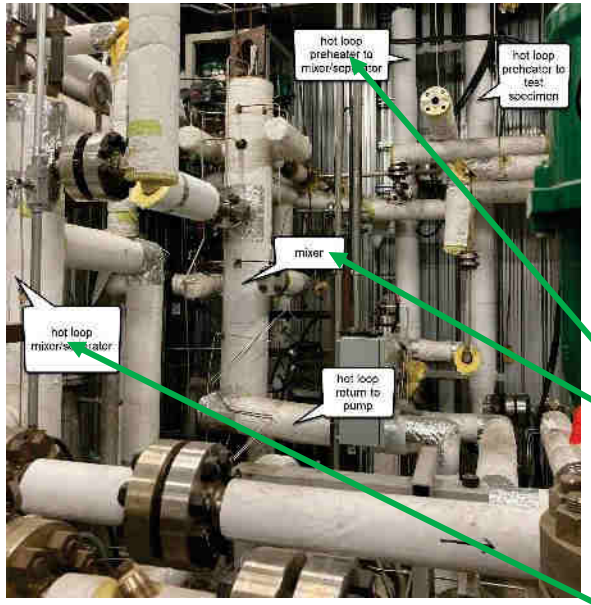

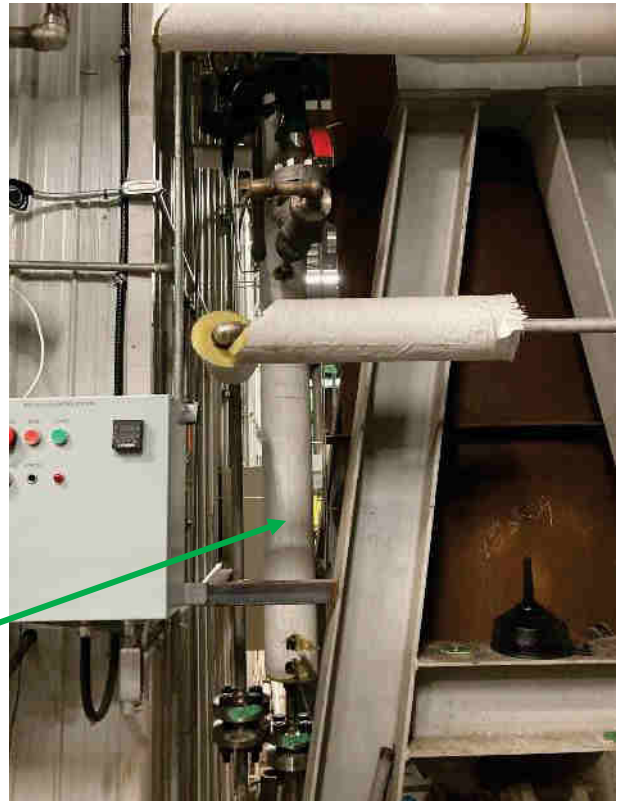

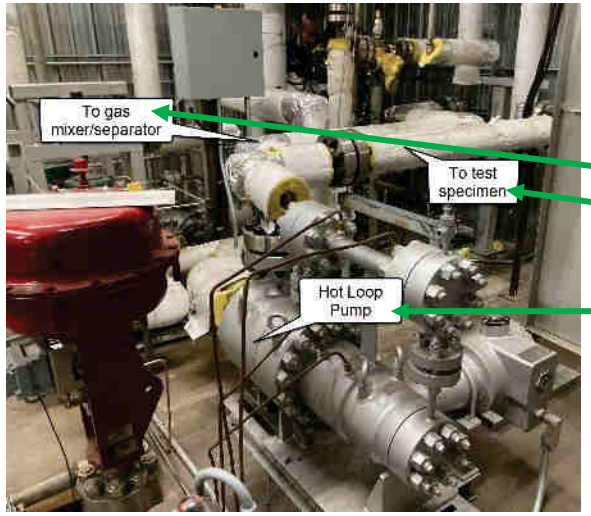

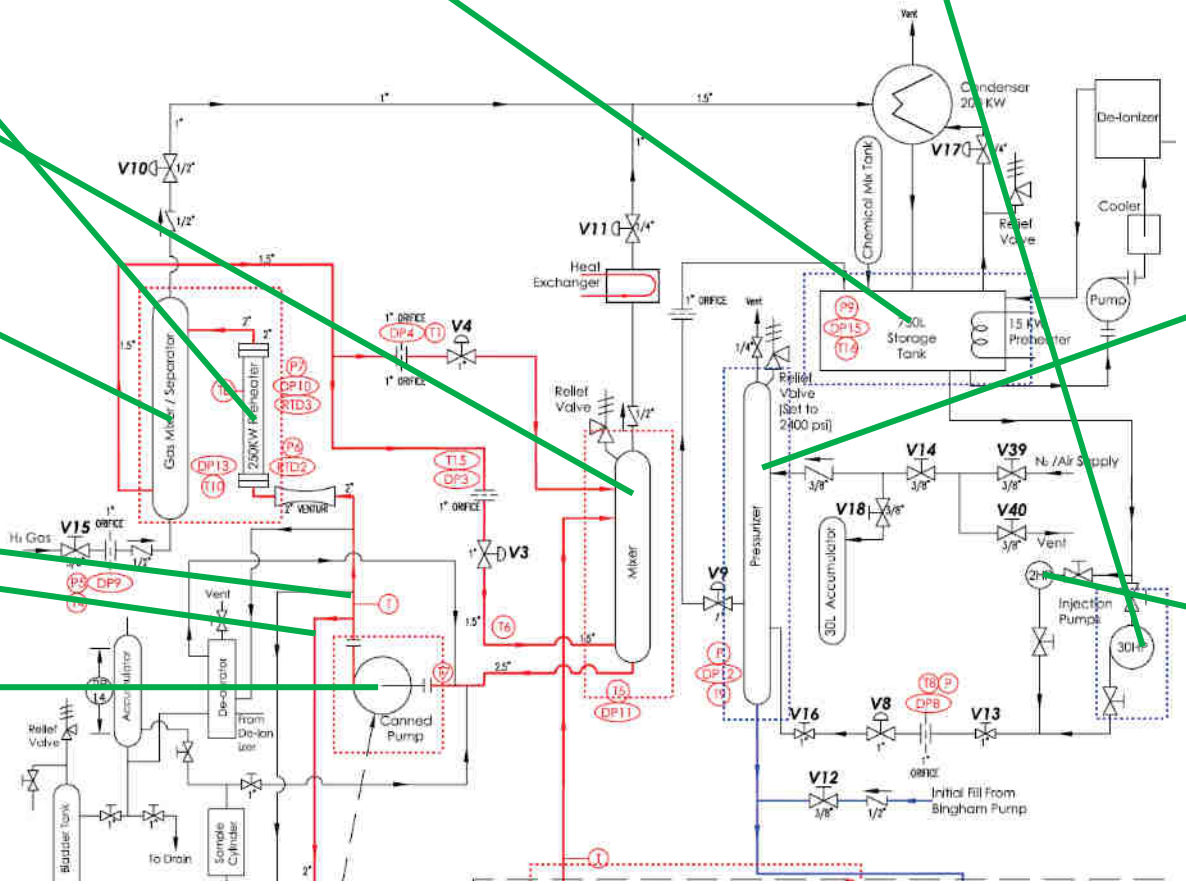

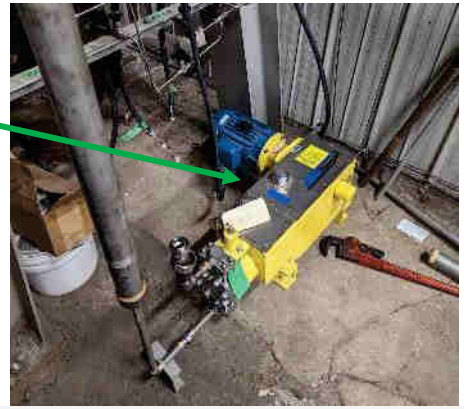

© 2023 Electric Power Research Institute, Inc. All rights reserved.

Loop Details (continued)

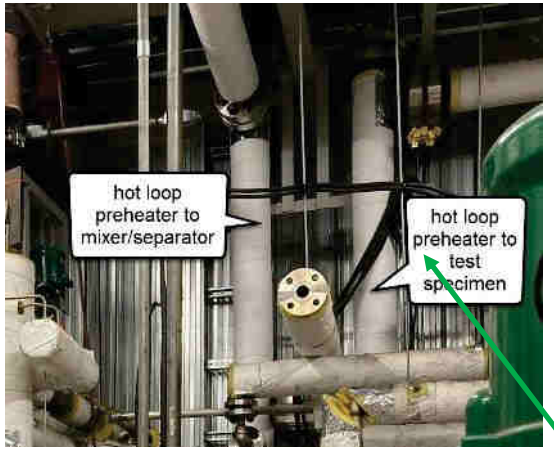

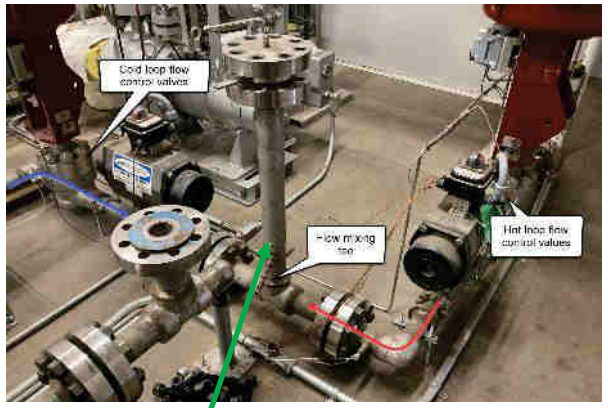

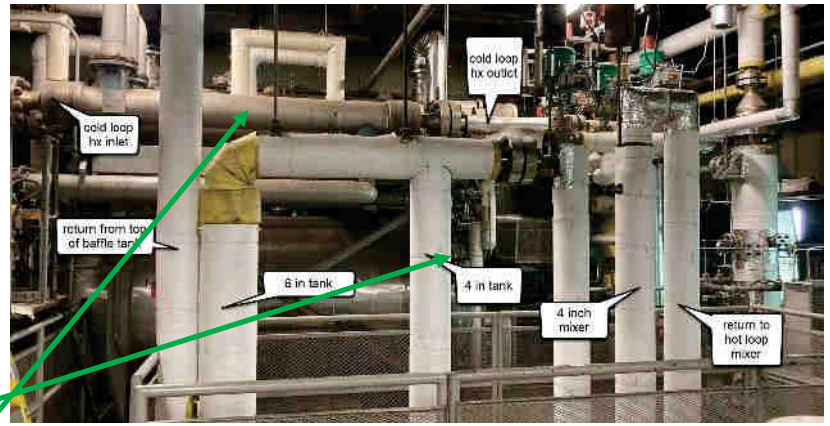

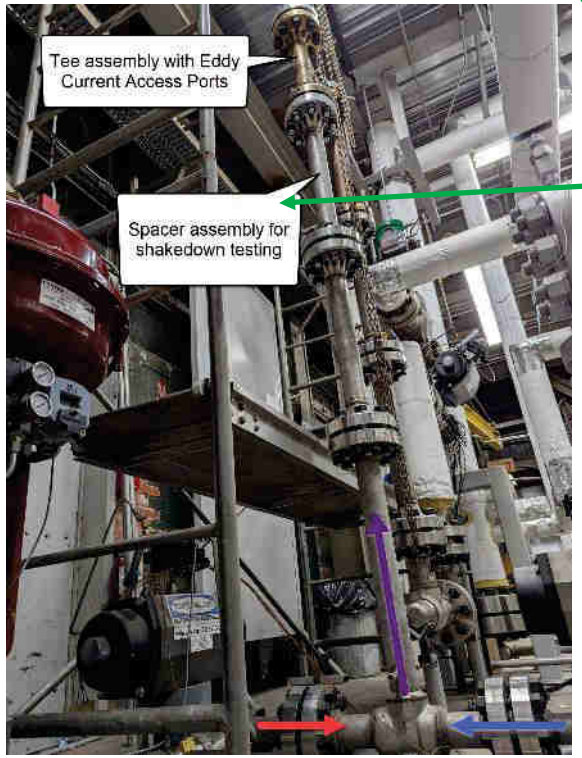

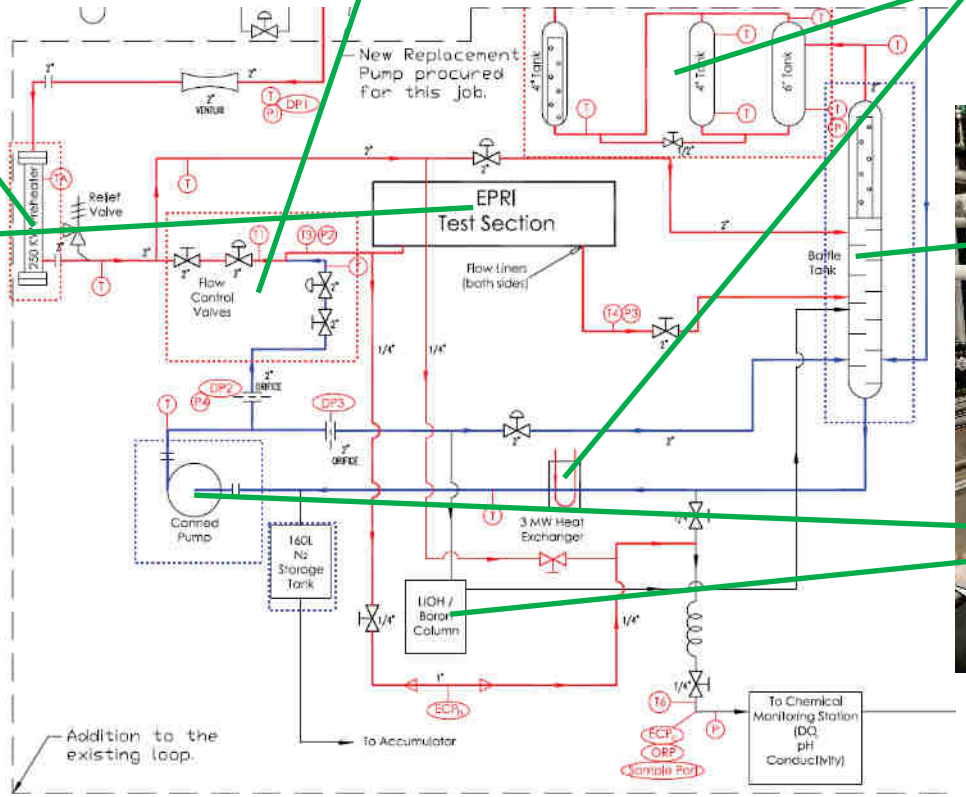

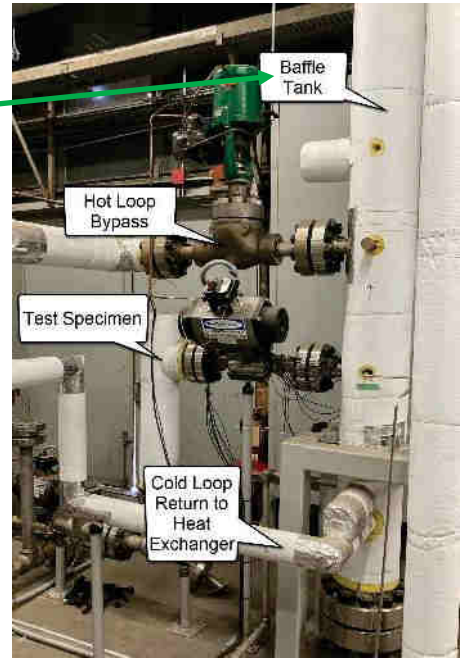

© 2023 Electric Power Research Institute, Inc. All rights reserved.

Loop Control Program

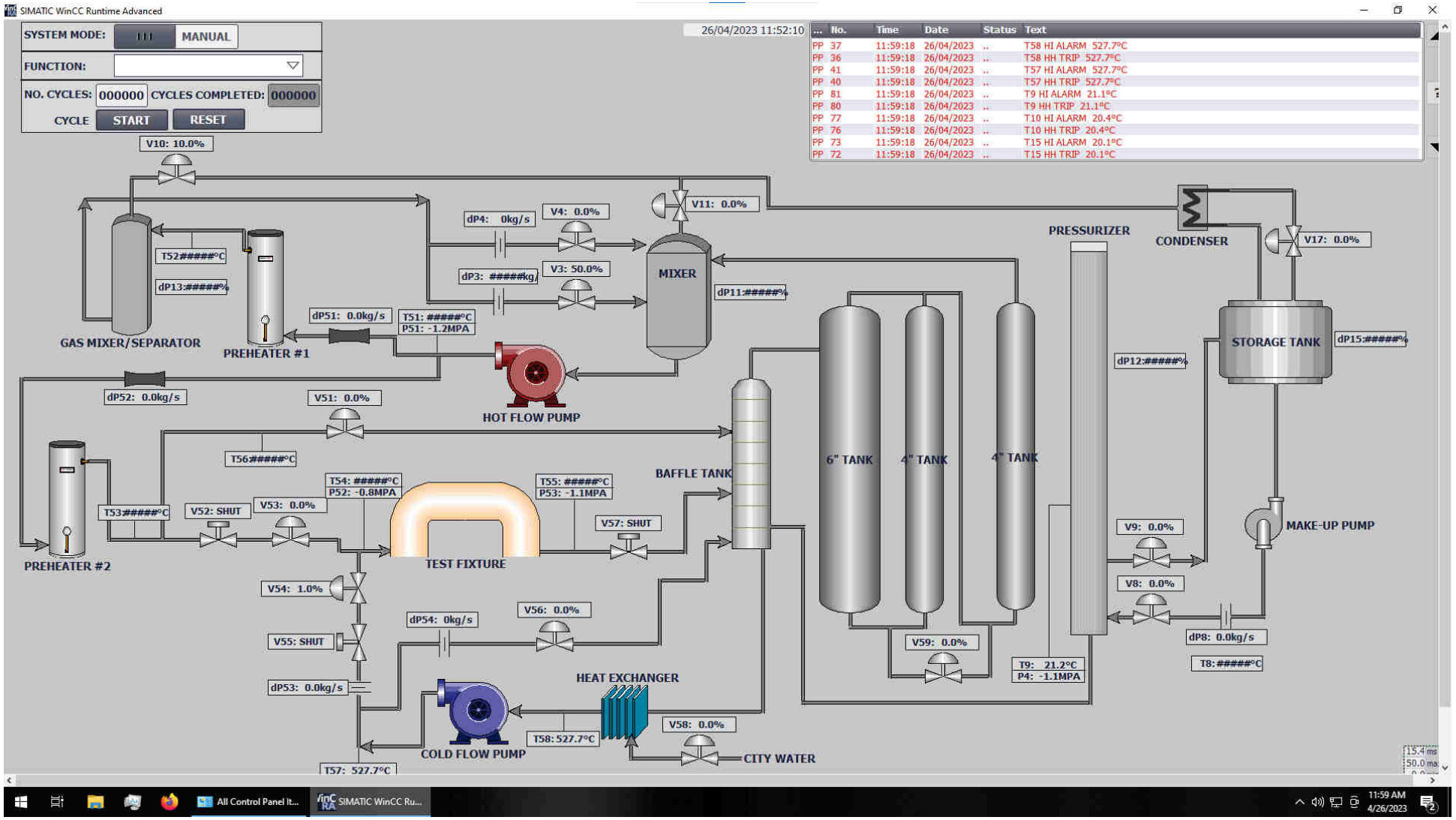

© 2023 Electric Power Research Institute, Inc. All rights reserved.

Test Material

© 2023 Electric Power Research Institute, Inc. All rights reserved.

Test Material

© 2023 Electric Power Research Institute, Inc. All rights reserved.

Strain Benchmarking Specimen Mockup

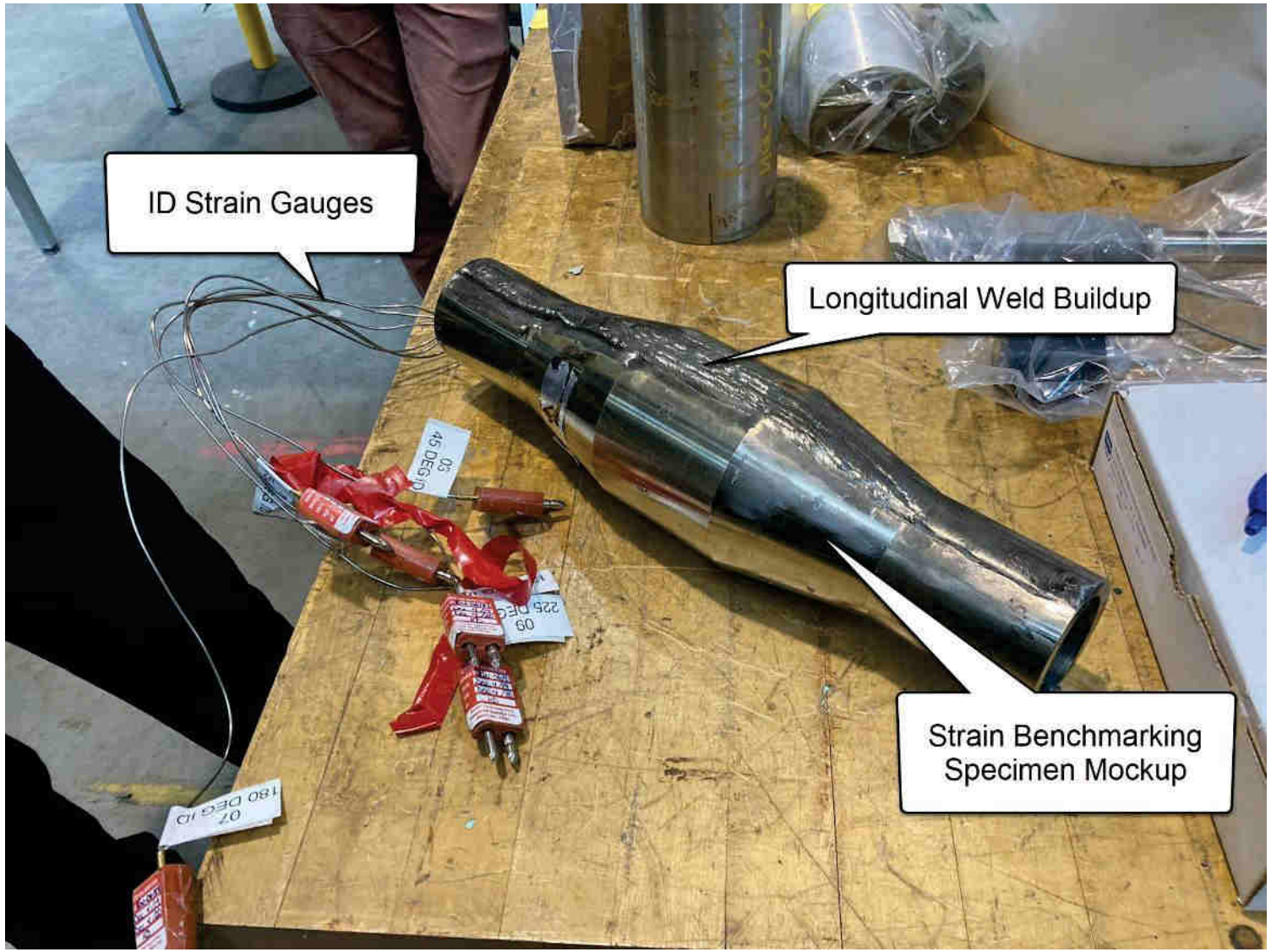

© 2023 Electric Power Research Institute, Inc. All rights reserved.

ID specimen honing comparison

© 2023 Electric Power Research Institute, Inc. All rights reserved.

Thermal Benchmarking and NDE Qualification Specimens

© 2023 Electric Power Research Institute, Inc. All rights reserved.

NDE Calibration and Baseline Scanning

© 2023 Electric Power Research Institute, Inc. All rights reserved.

NDE Equipment

Eddy Current Fixture

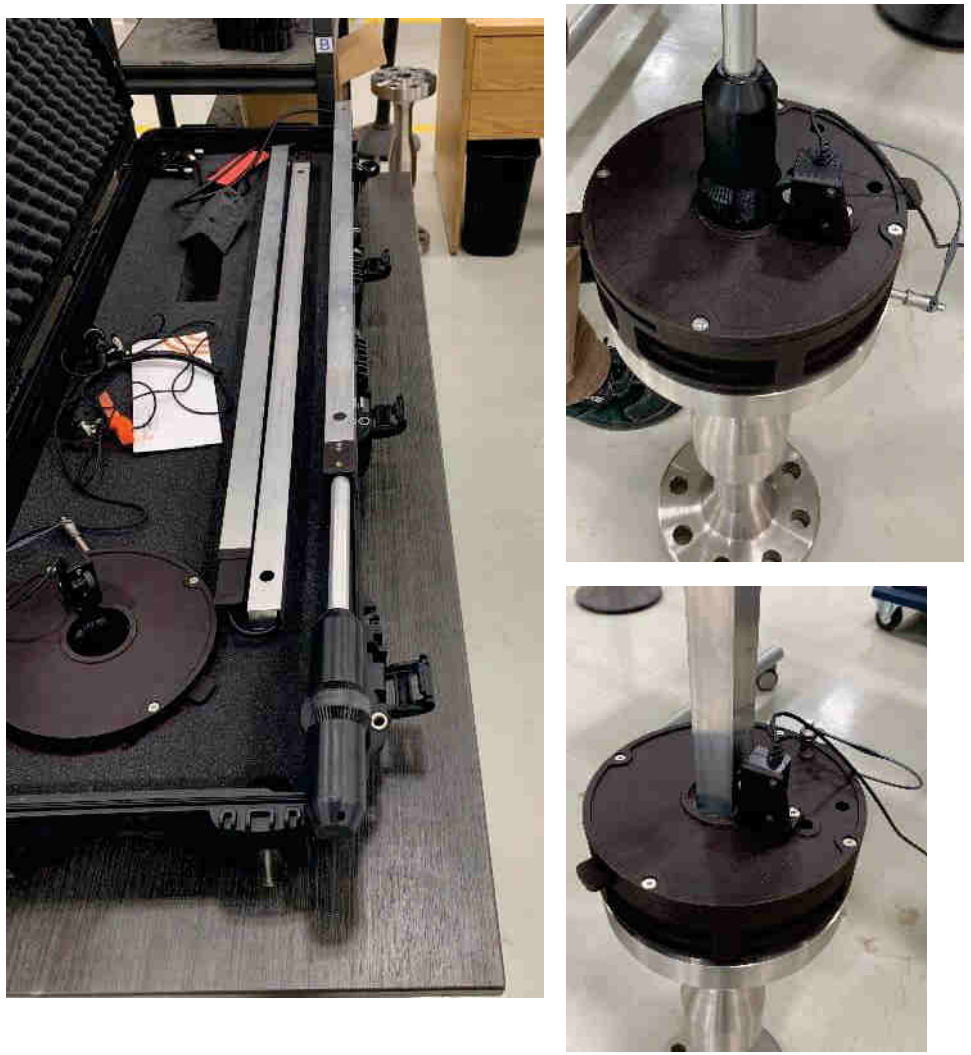

Ultrasonic Inspection Fixture

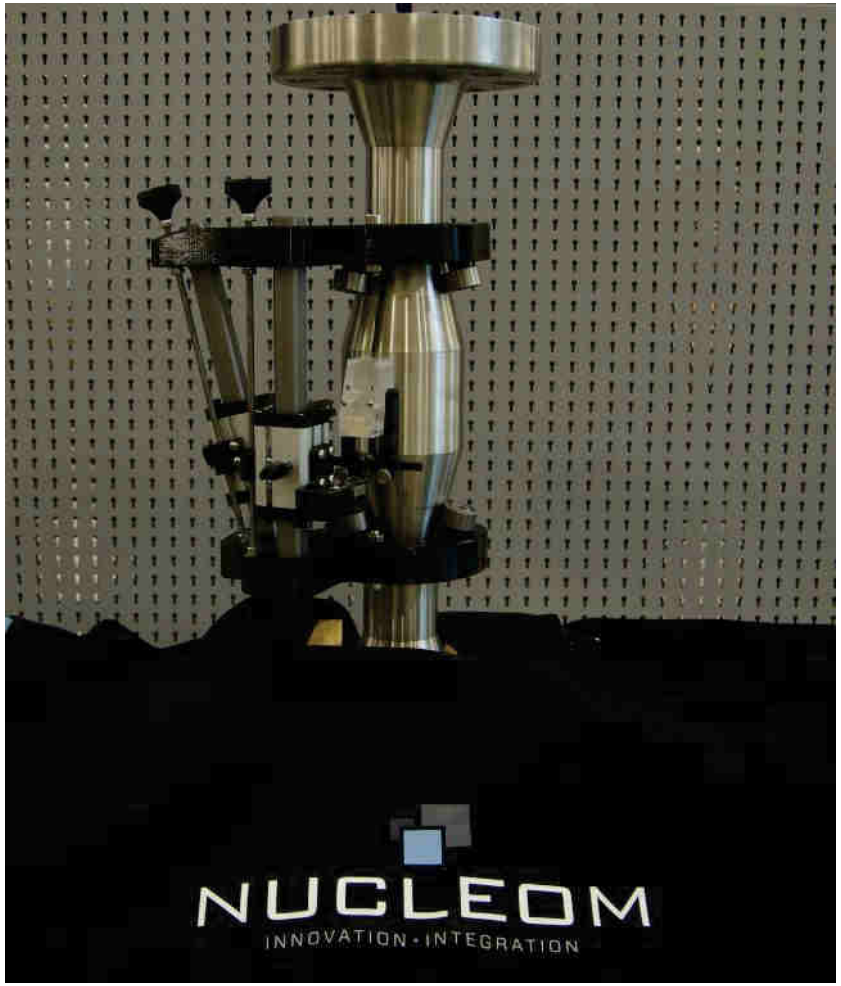

© 2023 Electric Power Research Institute, Inc. All rights reserved.

NDE Calibration

- Two calibration block specimens from the sourced material were prepared and sent by Kinectrics to Nucleom for the NDE work.

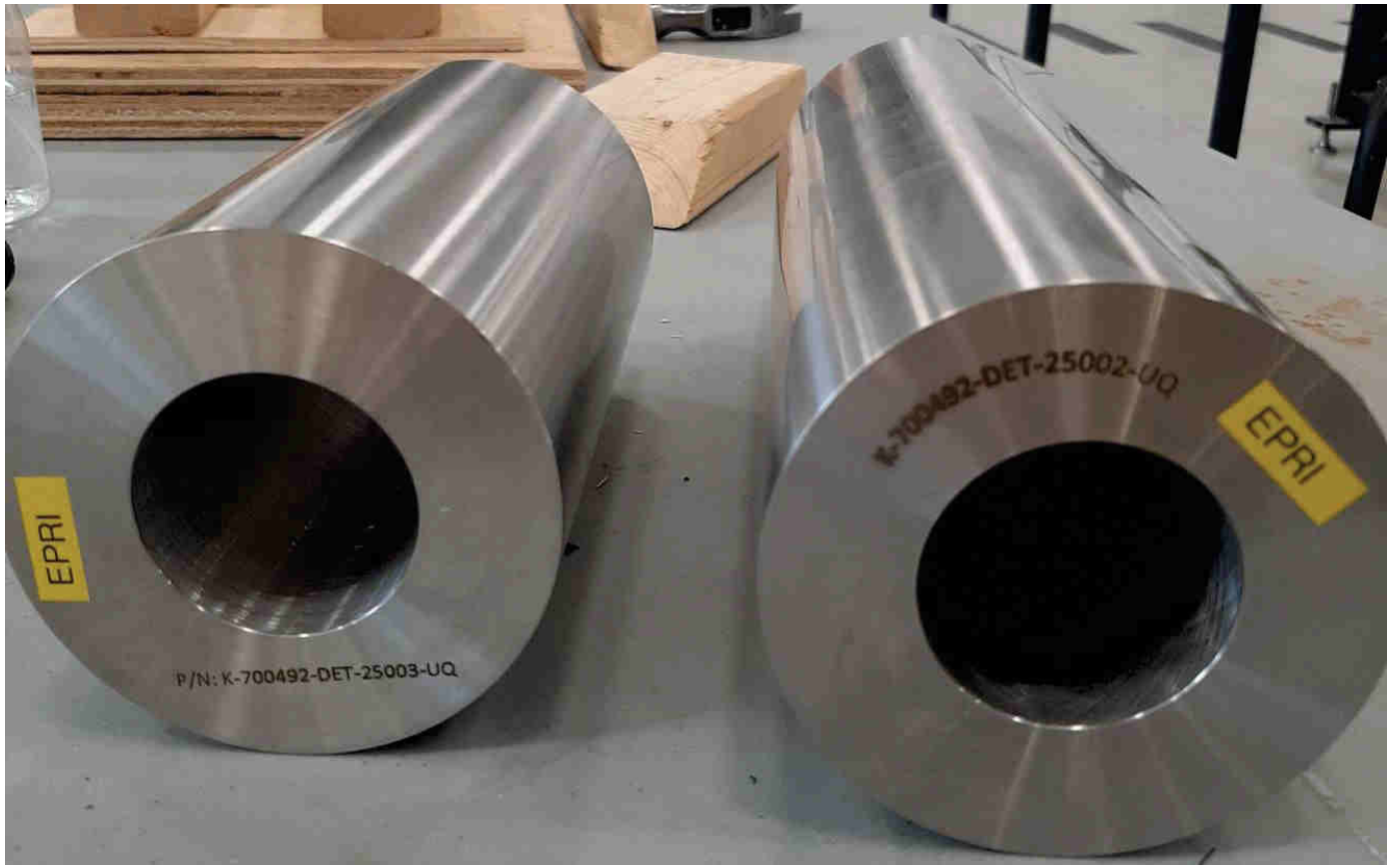

- Phased Array UT (PAUT)
  - Exams found no embedded flaws that could impair future calibration work
- Eddy Current (EC)
  - Did find some ID signals that could affect future work in one quadrant of one specimen (right). Care taken to avoid that area

© 2023 Electric Power Research Institute, Inc. All rights reserved.

NDE scanning demonstration at Nucleom

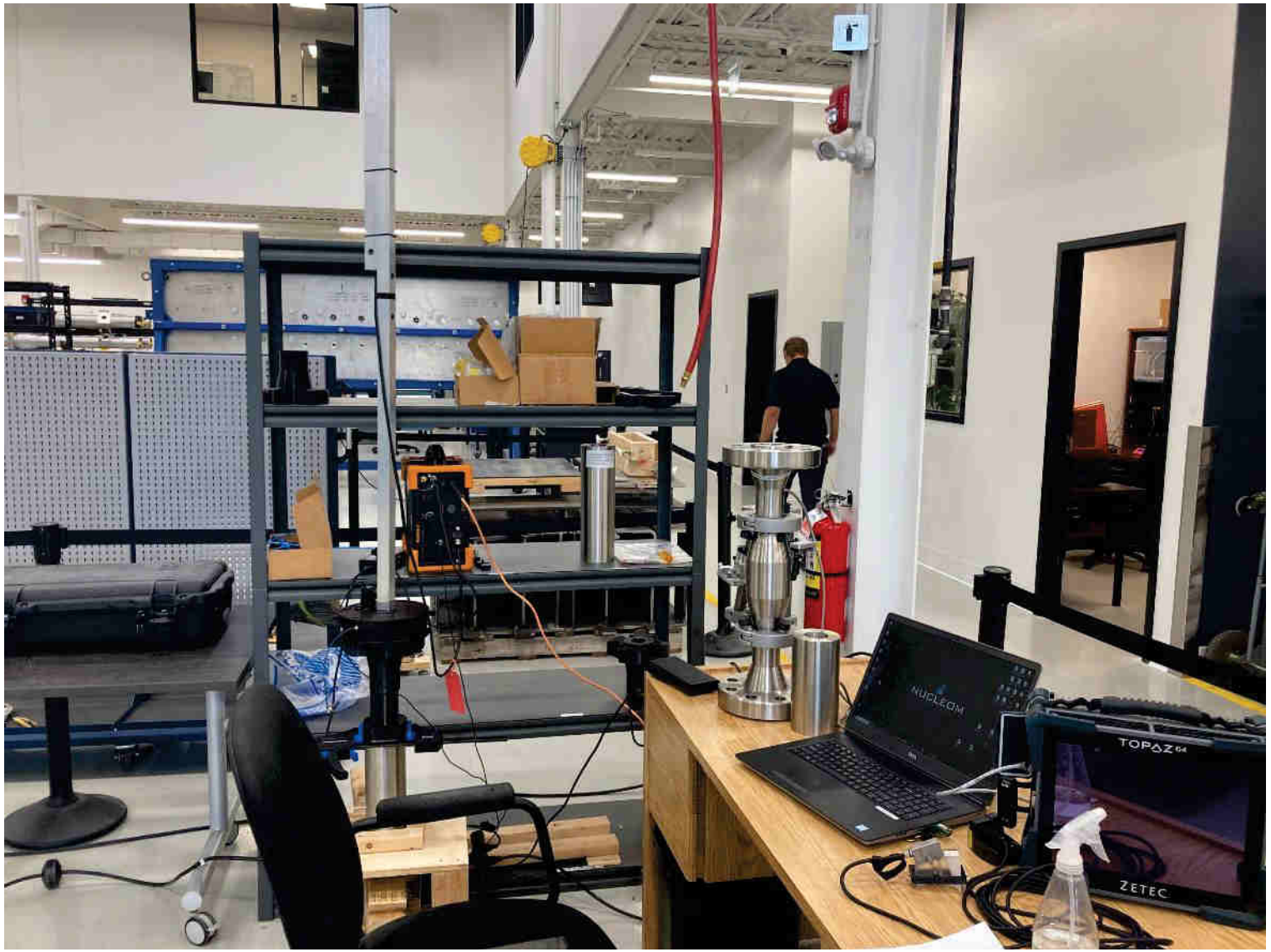

© 2023 Electric Power Research Institute, Inc. All rights reserved.

Initial Data on Temperature Cycling

© 2023 Electric Power Research Institute, Inc. All rights reserved.

Loop Shakedown Activities

- Stern has been working on the loop automation and safety controls
- On July 27 we witnessed the first two temperature transients
- 2 ½ cycles were applied to the dummy specimens over a 30 minute period
- The loop was operating in manual mode by the Stern technicians

© 2023 Electric Power Research Institute, Inc. All rights reserved.

Temperature data from just before the specimens

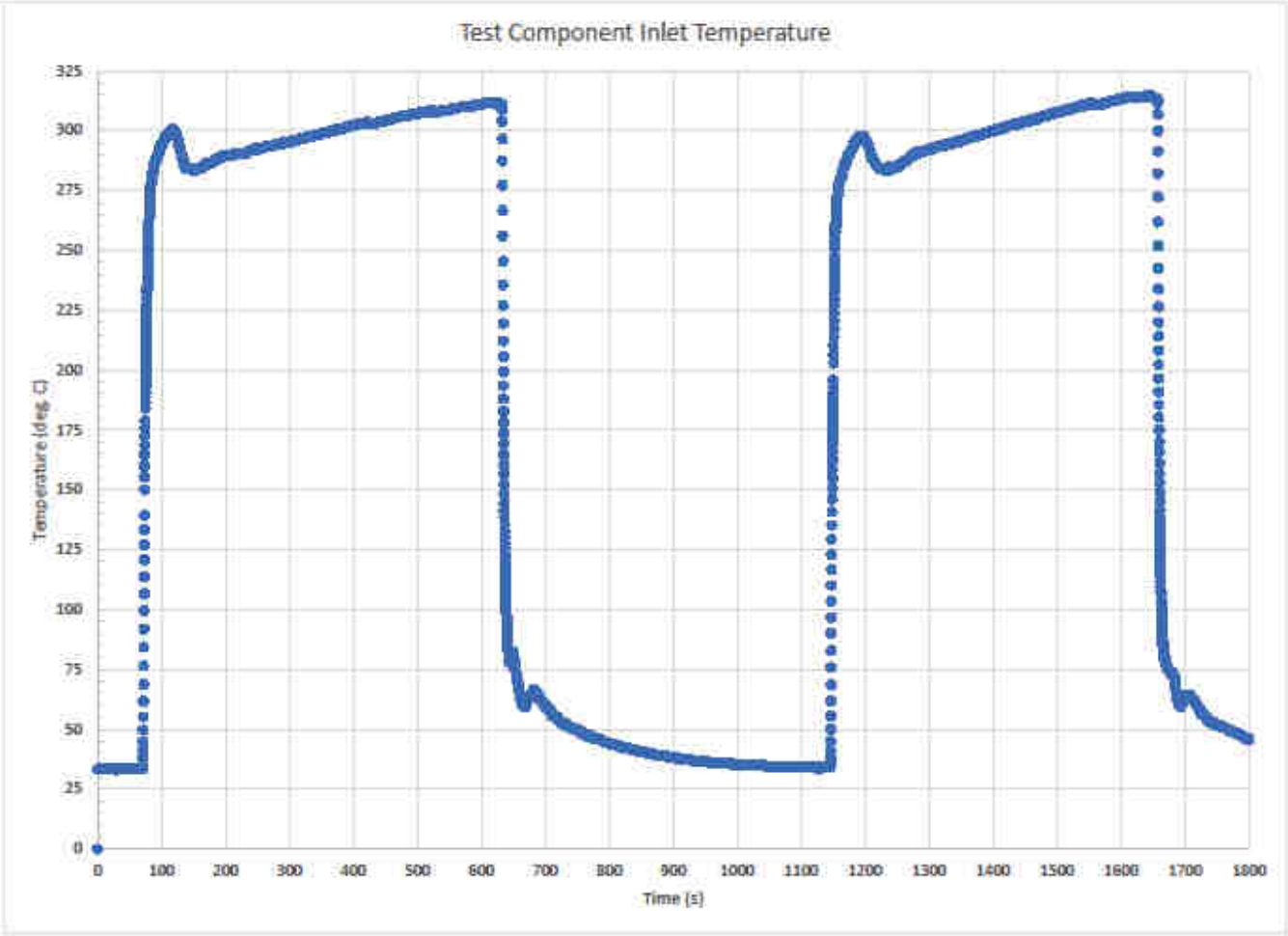

- Loop was not at the full temperature range (~305 C vs 325 C)
- All operations were done manually
- Elastically calculated stresses are about 12% under idealized transient predictions from the design phase
- Positive outcome from our first cycling operations

© 2023 Electric Power Research Institute, Inc. All rights reserved.

2023 Testing Activities

Begin loop shakedown testing	5/2023
Complete fabrication and instrument placement of thermal/strain benchmarking and NDE qualification specimens	9/2023
HOLD POINT: EPRI EAF Team approval to begin strain and thermal benchmarking specimen testing.	10/2023
Complete strain and thermal benchmarking test	11/2023
Complete NDE qualification test and assess results	01/2024

Strain Benchmarking Specimen

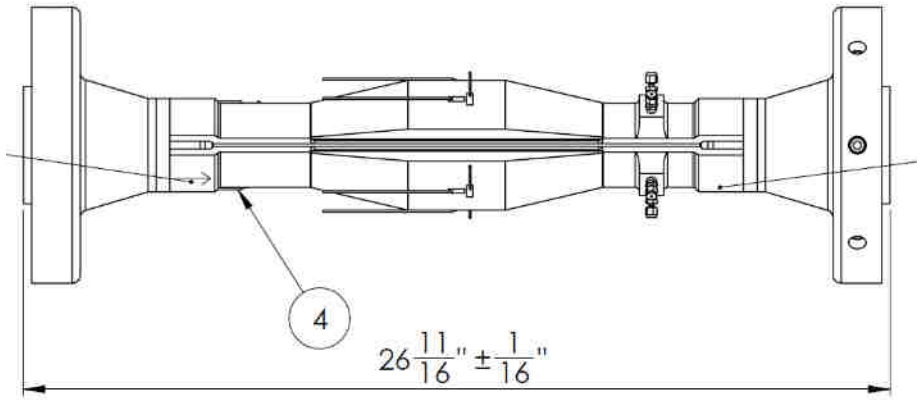

Thermal Benchmarking Specimen

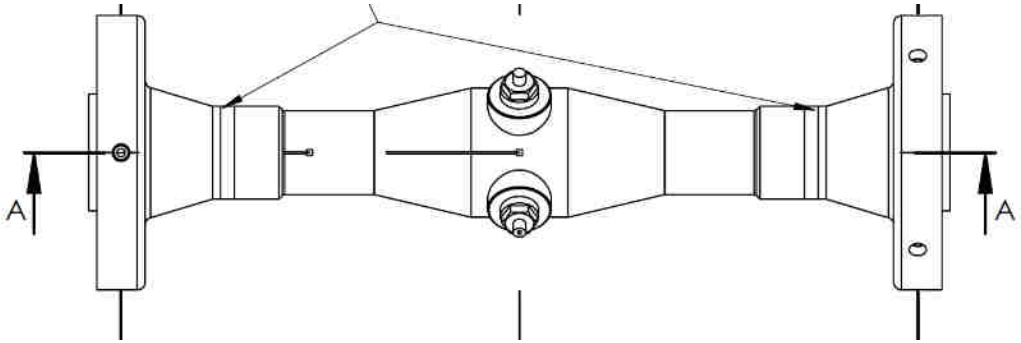

© 2023 Electric Power Research Institute, Inc. All rights reserved.

Together…Shaping the Future of Energy®

© 2023 Electric Power Research Institute, Inc. All rights reserved.